A New Method for Testing Polymer Gear Wear Rate and Performance

K. Mao*, D. G. Chetwynd and M. Milson
School of Engineering, University of Warwick, Coventry, CV4 7AL, UK
*the corresponding author: k.mao@warwick.ac.uk

Abstract
This paper provides details of a new test rig design and methodology intended for, and successfully applied to, measuring the gear wear rate and performance of polymer composite gears under both dry and lubricated conditions. One of its unique contributions is that it continuously measures the gear wear rate, a feature essential for understanding polymer gear behaviour. While sharing some concepts with the traditional back-to-back test configuration used for steel gears, the new method introduces a rotary freedom to the block supporting the polymer gears under test. This block rotates if the gear tooth thickness is reduced, which aids control of the test load. The gear surface wear rate is recorded continuously by using a capacitance transducer to measure the pivot block motion. A second unique contribution of the new test method involves splitting the support block so that controlled misaligned gear engagements (not reported in other designs) can be introduced and subsequent changes to wear behaviour studied. The paper first outlines the test rig concepts and design before discussing in more detail the gear wear rate measuring principles, the methods of centre distance adjustment and the achievement of virtually constant gear loading. Finally, a selection test results are presented in summary to further validate the new test method and illustrate potential applications.

Keywords: Polymer gears, wear rate, gear misalignment, durability, thermal behaviour

1. Introduction

Concerns over factor such as global warming and increased environmental pollution have further stimulated the use of renewable polymers in machine elements and of sustainable processing methods for the preparation of environmentally friendly, high-performance polymer compounds having tailored functionality. Increasing demands for light weight and low carbon engineering devices have resulted in a rapid increase in the use of polymers. In particular, polymer composite gears offer a huge potential for high-technology applications. They have unique advantages over metal gears, such as: low cost and weight, fast manufacture, quietness of operation, functioning without external lubrication, *etc*. For example, the use of polymer composite gears in an automotive power train has been reported to reduce mass by 70%, reduce inertia by 80% and lower fuel consumption by up to 9% [1]. Worryingly, however, hardly any design methods are effective for polymer composite gear applications, especially in regard to temperature calculations and fibre orientation controls. Current polymer gear design methods such as the British Standard [2] derive from metal gear practice, which does not correlate well with test results for polymer gears [3-4]. The temperature dependence aspect of the latest German VDI standard [5], as with the British Standard, is based essentially on Hachmann and Strickle's approach [6], *i.e*., for lubricated nylon against steel gears, with a few minor modifications. Consequently, the VDI standard does not offer a step forward in knowledge about temperature dependence for most applications. Since Hachmann and Strickle's early attempt, only a little progress is found in the literature; a notable example is Gauvin *et al*'s equation [7], which is limited to polymer against steel gears. In most of the experimental studies on gear running temperatures, surface temperature measurements were carried out after stopping the gears: such methods are inaccurate because the flank temperature drops very rapidly once the gear stops [8-9]. Recently, early results from new research have shown a 50% loading capacity increase for glass fibre reinforced POM gears [10]. In summary, the information on testing polymer composite gear performance remains very limited and insufficient for design purposes.

Polymer gears can be tested in much the same way as metal gears, using a classical back-to-back or closed loop test configuration where the gears are loaded by winding in the torque to a prescribed level. One gear box contains metal gears, which do not require regular replacement, that are otherwise identical to the polymer test gear pair that forms the opposing set. The two gear pairs are joined by shafts to form a closed circuit. The main advantage of this machine is that the motor used to rotate the gears needs to transmit only the power required to overcome frictional resistance in the

gears and the bearings. Early experiments showed that this standard arrangement was unsatisfactory because the tests have to be stopped to measure progressive gear wear. Polymer gears are very sensitive to thermal effects, so this traditional approach (acceptable for metal gears) will show very different results to those obtained from continuously running tests. Also, polymer gears undergo a relative large amount of wear compared to that for steel ones, which can lead to unwinding of the set torque during the test. These are general concerns: most previous test methods derive from traditional metal gears testing [11,12] and so fail to capture important thermal behaviours of polymer gears. Another concern is that hardly any test methods have been reported for either polymer or metal gears that enable controlled study of gear misalignment, even though it has long been known to be a critical factor for industrial gear applications [13-19].

To overcome these concerns, a new test-rig design and associated methodology has been developed and demonstrated to be effective. It offers good flexibility for studying different running conditions, but its main importance lies in allowing continuous recording of gear surface wear rate and maintaining a constant torque on the test gears irrespective of tooth wear. The purpose of this paper is to describe the concepts of the design in detail and encourage its wider adoption. The following section first discusses overall principles and the related design and operational requirements, before exploring two of the most critical issues in even more detail. Then, Section 3 shows typical results from a selection of early experiments to demonstrate the capabilities of the new method and, incidentally, to illustrate the potential for polymer gears in a wide range of high-performance applications. General conclusions are drawn in Section 4.

2. Design of the polymer gear tester

The basic requirement for the method proposed and explored here is to measure the wear of polymeric gear surfaces continuously under constant load conditions. The test rig employs the general ‘back to back’ strategy, already widely used for testing metal gears. This effectively provides a ‘family’ of devices, where the layout can be adjusted to investigate many configurations, but for any specific test rig the type of specimen gear pairs is restricted by factors such as the gearing of the drive gearbox and the centre spacing of its shafts. Discussion here focuses on the prototype machine, set up for pairs of 30-tooth module 2 mm gears (60 mm centre distance). Two slightly different layouts of the same basic principle have been implemented. Fig. 1 and the schematics in Fig 2 show one, in which the relative positions of some key features are more easily seen. The other was used for some of the illustrative examples given here and is discussed later.

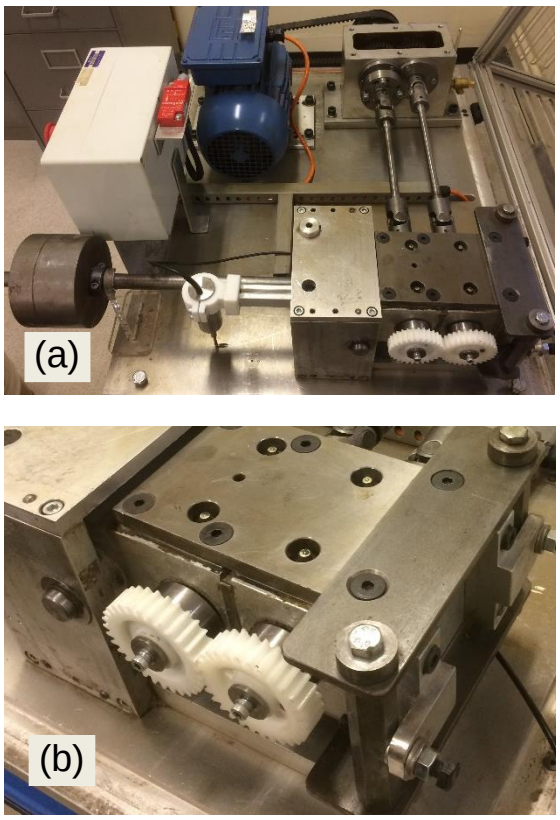

Fig.1 The prototype gear test rig

2.1. Underlying principles and mechanical layout.

The test rig was designed as a variant of the four-square layout, employing a gearbox (4, where numbers relate to those on the schematics in Fig. 2) with a centre distance of 60 mm and the test gears (9) held on a pivot block assembly (8). The pivot block is held by needle rolling bearings onto a horizontal fixed shaft (14). Each of the test gear mounting shafts in this block is connected to the gearbox by a shaft (5 and 6, one driving, one driven) and universal joints (7) that accommodate significant motion of the block relative to the gearbox. Without the test gears mounted, the pivot block can rotate freely, within the constraints of hard safety stops. The engagement between mating teeth of the test gears prevents this rotation, mechanically locating the pivot block to the gearbox and base. Load is applied to the gears by imposing a constant 'dead weight' torque on the pivot block by means of a weight (10) and loading bar (11). This pivot arrangement and loading method permits a large amount of tooth wear

without significantly affecting the applied load, a feature unique to this test rig configuration. The variant layout operates in the same manner, but has the pivot beneath the pivot block rather than to the left of it (as is illustrated in Fig. 5(a)).

The test rig gearbox is driven *via* a belt and pulley (3: interchangeable, for different running speeds) by a 3.7 kW induction motor (2). A thermal cut out is included in case motor overloading occurs, as might happen if the gears jammed. Limit switches with associated contact plates (13) are attached to the pivot block to stop the motor if block motion becomes excessive in the event of high wear or gear failure: the plates can be adjusted to set a maximum permitted wear for specific tests.

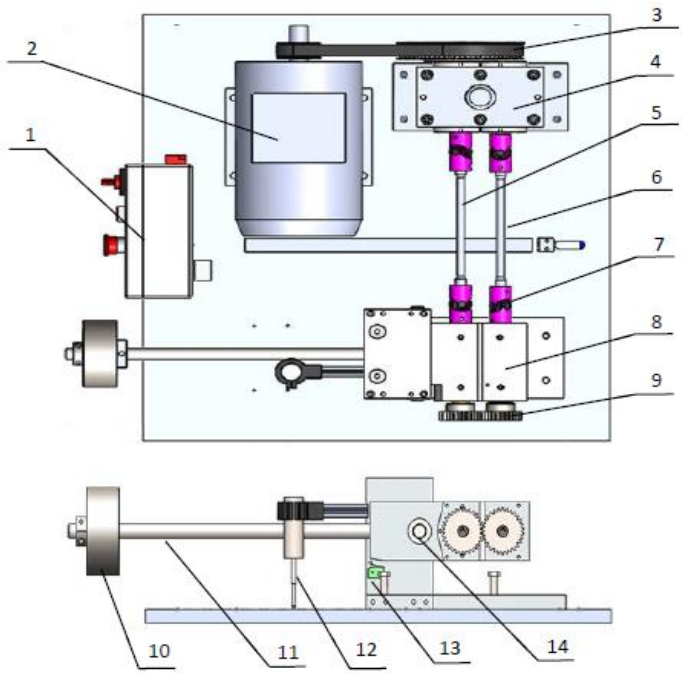

1. Power control
2. Motor
3. Pulley
4. Gearbox
5. Driving shaft
6. Driven shaft
7. Four universal couplings
8. Pivot block assembly
9. Test gears
10. Weight
11. Loading bar
12. Transducer
13. Micro switch
14. Pivot

Fig.2 Mechanical schematics and layout for the new gear tester design

One potential difficulty with polymer composite gears is that they tend to shrink after moulding, and the level of shrinkage can vary from batch to batch. Furthermore, the test rig must be able to accommodate gears made by different processes and made from various materials having different levels of shrinkage. With a fixed centre-distance, variations in shrinkage will lead to variations in the exact engagement conditions, thereby changing the operating pressure angle, the contact ratio and the contact force. Hence, the pivot block assembly is made in two halves, to allow adjustment of the centre distance. Four spacers are fitted between the two halves when they are clamped together, with shims used to allow setting to the optimum centre distance required. Although this distance might be set directly after sufficiently accurate measurement of the gears, in practice the best way to obtain it was found to be to adjust the spacers to produce a specific backlash.

The robust clamping of the two halves of the pivot block with spacers is simple and provides good repeatability: it avoids the need for several adjusters that would need to be locked against disturbance by the substantial vibration levels. It requires some skill and time, but that is likely a good compromise for a research environment. There is, though, another major reason for adopting this approach. It provides a means to study the wear patterns of polymer gear pairs that are geometrically misaligned to each other, a critical, but so far unexplored, factor because the softer polymers are more likely to

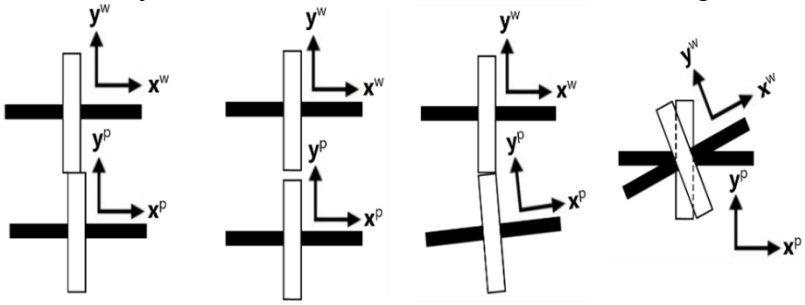

(a) axial (b) radial (c) yaw (d) pitch

Fig.3 Controlled misalignments

be affected by consequent changes to tooth load patterns than are metal gears. Simply by introducing different sizes of shims at the different spacer positons, known amounts of misalignment can be pre-set in any of the axial, radial, pitch and yaw axes, see Fig. 3. An early consideration of this feature can be found in [4].

The pivot block concept at the heart of the new design also addresses the important issue of monitoring the progressive wear rate for polymer gears, while maintaining thermal conditions close to those in normal running. The contact between worn teeth defines the equilibrium position of the block, slightly rotated from the one set initially by new teeth. Thus, this rotation indirectly gives a continuous indication of wear throughout a test. In practice, it is measured by the linear movement of a defined point on the block or a rigidly attached tangent arm and a convenient displacement sensor (12): please see Section 2.2.

In summary, primary specifications for the prototype test rig are:

- Speeds: 500 - 5000 revs/min, precision 1%
- Load torque: 1 – 50 Nm, stable to 1%
- Maximum wear: 1.6 mm, resolution 0.002 mm
- Temperature: 20 - 200ºC at the tooth interface

This maximum wear corresponds with half the tooth thickness for a module 2 mm gear. Good working space is required around the test gears to allow room for additional instrumentation and, especially, for an oil bath and shields for investigating lubrication effects.

2.2 Pivot block motion: continuous measurement of tooth wear

Throughout this work, instantaneous wear is expressed as a loss of tooth thickness normal to the surface at the pitch circle. Cumulative wear in the running condition then manifests as a motion around the pitch circle. Unlike their metal counterparts, polymer gear teeth can suffer significant creep, especially if running at elevated temperatures. This is technically different to wear (material is not removed) but also contributes a running ‘error’ and will be detected by any measurement based on the tooth surface positon. To avoid continuous repetition of the phrase “wear plus creep”, the term “wear” is used here to specify half the total depth of material removed from a pair of engaging tooth surfaces plus any creep of those teeth. The dynamic characteristics of the test rig inhibit vibrations at tooth frequencies. This ensures that the combined wear, deflection and creep in the two gears are uniform over the complete contact path. Because of the complexity of the wear over the contact path, the amount wear on the two gear teeth will differ from point to point but the sum will be constant. For mating gears of the same material, we might expect similar wear rates on both surfaces, so, for convenience of presentation here, the wear is generally described for a single gear tooth by simply taking half the total wear. Other situations could be addressed simply by reallocating the proportions.

The relationship between pivot block rotation and tooth surface wear can be found by considering the work-energy balance in the system. When the gear teeth wear, the relative movement around the pitch circle between the mating teeth absorbs an amount of work U . This work arises from the gear contact force F_n acting on the incrementing wear depth w_l of the mating teeth. So, integrating on the circular path gives $U = 2F_n w_l$.

This work is supplied by the rotation γ of the pivot block in the direction of the 'dead weight' torque. For the configuration used in the new design, this torque is well approximated (see Section 2.3) by the sum of the torques (which are equal for 1:1 gear ratio) acting on the test gears. Thus, we also have $U = 2T\gamma$. The energy balance requires

$$F_n w_l = T\gamma \tag{1}$$

Noting that conventional gear theory relates the contact force F_n to the torque T as

$$F_n = \frac{2T}{d_p \cos\alpha} \tag{2}$$

where d_p is the pitch circle diameter and α is the pressure angle, reveals that

$$w_l = \tfrac{1}{2}\gamma d_p \cos\alpha \tag{3}$$

That is, the wear is directly proportional to the rotation of the block γ.

To obtain the wear, it is only necessary to measure the rotation of the block about the pivot and apply equation (3), assuming, of course, that the actual pitch circle diameter and the pressure angle are known. In practical testing, the rotation range of the block tends to be very small (generally below 3 degrees) and direct measurement of the angle therefore requires high precision transducers, which are difficult to manufacture and very costly. A more practical and economic way to determine the rotation angle is to measure, relative to the base, the linear movement d along a line at a perpendicular distance h from the pivot of a specific point fixed rigidly to the block. For small rotations of the block, sufficient accuracy is obtained by taking $\gamma = d/h$, when substituting into equation (3) gives

$$w_l = \frac{d_p \cos\alpha}{2h} d \tag{4}$$

Choosing a larger h generally provides higher sensitivity to wear for a displacement sensor of given precision (and so cost) but also increases vulnerability to uncertainties such as thermal disturbances to the assumed length of the tangent arm. The test-rig variant in Fig. 1 uses a commercial 20 mm range inductive (LVDT) gauge on a tangent arm to the left of the block, giving very easy set up.

A good compromise for improved stability is to measure instead using a capacitive gauge at a point on the rigid main structure of the block as far from the pivot as reasonable without serious risk of the sensor being disturbed during operation. The second prototype layout uses a horizontal sensor acting on the vertical face of the block, 122 mm vertically above the pivot (the measurement line is seen at B on Fig. 5a). The constant of proportionality in equation (4) depends only on fixed features of the test rig: its value is ~0.23 for 60 mm gears with 20° pressure angle. A limiting condition for severe wear might be that half the tooth thickness is lost: 1.57 mm for a module 2 mm gear. This corresponds to a maximum measured displacement of 6.79 mm at a total block rotation of 0.056 rad (3.2°). The worst case error arising from the small angle approximation at equation (4) is no more than 0.12%. A reasonable, practical target for the continuous, in-process monitoring of tooth wear and wear rate is to have clear indications of changes at the level of 1% of the maximum. The recording and processing to present real time values then clearly requires a combined sensor, electronics and computer system having inherent resolution and noise levels of below about 0.1% (i.e., around 7 μm at the sensor, 2 μm actual wear).

Calibration is always important , but is especially so for the capacitive gauges in the second test-rig. They are robust, reliable and minimally interfering with other mechanical systems, but they tend to exhibit non-linearity over the ranges needed here. Hence, a moderately elaborate absolute calibration was carried out. A set of point values across the range of displacement was measured independently by a precision dial gauge and supplied to a curve-fitting utility within the commercial data-logging program. These values were used to generate a fifth order polynomial approximation to the sensor characteristic, i.e., for a sensor value x, to set the coefficients of equation

$$w_l = C_0 + C_1 x + C_2 x^2 + C_3 x^3 + C_4 x^4 + C_5 x^5 \tag{5}$$

This suffices to capture the main non-linearity, without serious risks of artefacts caused by ‘over-fitting’. The software reports the maximum and RMS calibration errors at each of the points, allowing iteration to obtain a satisfactory performance. The RMS errors were normally less than 10 μm and typically about 6 μm. The quoted zero drift of the Wayne Kerr conditioning unit is about 1 mV on a 2 V output, or about 0.05%.The zero drift of the A/D converter is +/- 1 bit, also less than 0.05% over the more than 2000 levels typically used. The uncertainty budget contributions from the measuring systems are, then, compatible with the target usable resolution of 0.1% full-scale. Tests on the

system stability showed that the actual drift error after more than one hundred hours was nearly zero. Fig.4 illustrates the quality of the calibration, showing an example of manually obtained values (squares) and the fitted curve.

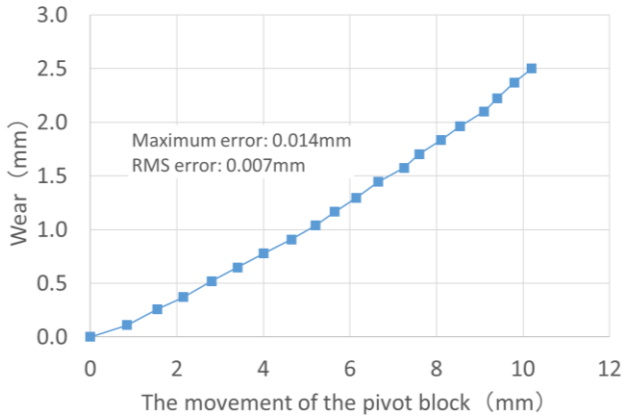

Fig.4 Typical calibration curve

2.3 Dead-weight torque loading system

Fig.5 shows two schematic views of the passive, 'dead weight', external loading scheme and torque balance, using the layout variant with the lower pivot position. Moments are applied about the pivot from the combined weights of the pivot block assembly, the loading bar and the extra mass placed at the requisite point along the bar. For convenience, we consider their action as equivalent to a weight W acting at a horizontal distance L from the pivot (*i.e.*, strictly representative of an ideal initial set-up where the added weight is totally dominant). This gravitationally derived torque is constant for a given test to within a cosine error associated with small rotations about the pivot. For equilibrium of the pivot block, it must be balanced by the couples, T_1 and T_2, acting on the two shafts *via* the test gear teeth. Both of these couples act in the opposite direction to the dead weight torque. Shaft 1 is the driving shaft and rotates in the same direction as its couple T_1, while the driven shaft 2 rotates in the opposite direction to its couple T_2. So, if friction at the pivot is negligible,

$$WL = T_1 + T_2 \qquad (6)$$

If there were no friction in the bearings of two gear shafts, the couples T_1 and T_2 on the two shafts, would be equal for the 1:1 ratio gear pairs being used. However, in practice, there will be some friction in the bearings, as shown in Fig. 5(b). The two shaft bearings are nominally the same and carry similar loads, so the small frictional torques are likely to have very similar magnitudes ΔT, acting always against the direction of rotation. The moment balance about shaft 1 then equates the couple on shaft 1 with the torque T on the test gear plus the friction torque ΔT in the bearing. The moment balance about shaft 2 is similar, except that now torque T acts in the opposite direction to the friction torque. Therefore,

$$T_1 = T + \Delta T; \quad T_2 = T - \Delta T \qquad (7)$$

Substituting into equation 6 shows that, for these conditions, there is a simple relationship between the 'dead weight' torque and the torque on the test gears

$$WL = 2T \qquad (8)$$

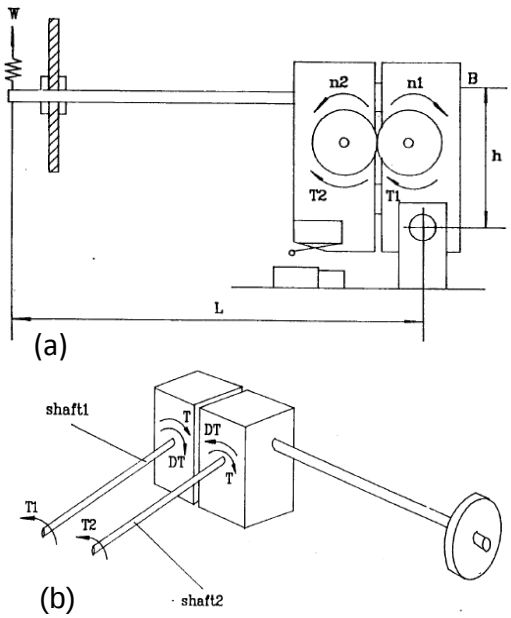

Fig.5 Gear tester loading scheme

Equation (8) is based on three assumptions. One is that there is no friction in the pivot bearing. This is reasonable because both the diameter of the pivot and the load are small. The second assumption is that the frictional torque is equal in the two shaft bearings. This is also a reasonable assumption because the friction torque is small compared with the dead weight torque so and any differences between friction torques will have a very small effect. Thirdly, as tooth wear causes the pivot block to rotate slightly, the dead weight torque is not truly constant, varying slightly as $WL\cos\gamma$. Various details about loading error have been analysed by the authors [3-4] and it is concluded that the gear loading accuracy is satisfactory for all practical purposes. For example, a block rotation by 3.2°

(which corresponds to a reduction of half of the tooth thickness of a module 2 mm gear) changes the load by less than 0.2% in this design.

Initial calibration of the dead weight loading was performed by attaching a high-quality spring balance to the end of the loading bar and taking readings when it was used to pull the loading bar into good horizontal alignment. This established the (fixed) contributions to W from the masses of the block and bar. Locating known additional weights suitably along the bar can then adjust the overall loading torque as desired, above this minimum.

3. Test results for the applications of the test rig

The new test rigs have already been used with several types of polymer and polymer composite gears. A selection of results are briefly summarized here to illustrate the potential of the method. The two prototypes behave very similarly, but note, for completeness, that data for Fig. 9 to Fig. 12 were taken from the one shown in Fig. 1. The tested gear materials are POM, PA66, PA46, PC, HDPE, PEEK, GFR (glass fibre reinforced) POM, and GFR PA66, run under both dry and lubricated conditions. All the tested gears have the same geometrical specification, shown in Table 1 and Fig. 6.

Table 1 Gear specifications

Module	2mm
Tooth numbers	30
Contact ratio	1.65
Tooth thickness	3.14mm
Nominal backlash	0.18mm
Face width	15mm
Pressure angle	20◦

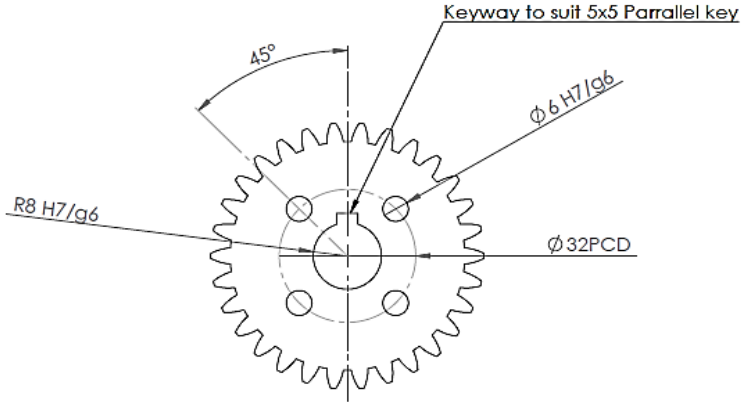

Fig.6 Testing gear drawing

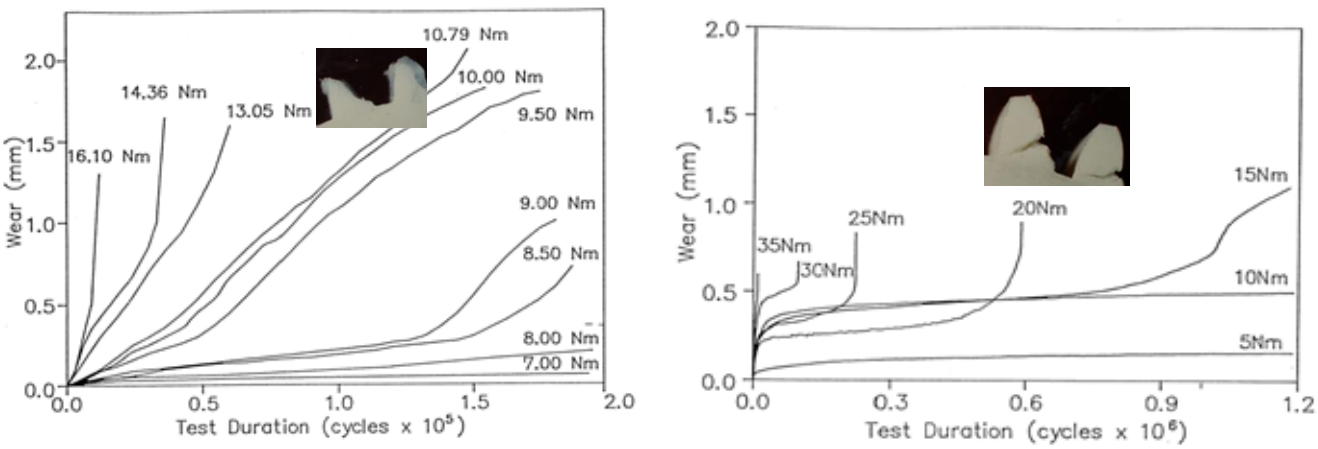

(a) POM against POM (b) GFR PA against GFR PA

Fig.7 Gear wear progression under various loads [3]

Fig. 7 shows examples of gear tooth wear measurement for POM (Fig.7 (a)) and GFR PA66 (Fig.7 (b)) gear pairs running at 1000 rpm under dry running conditions; please see [3] for additional details. Wear and thermal bending are the dominant failure modes for POM gears. However, pitch fracture dominated the failure for GFR PA66. Fig. 8 plots against torque the POM gear wear rate obtained through examining the wear slope in Fig. 7(a). There is a clear transition torque of about 8.5 Nm (red line in the figure). When loaded above the transition torque, the wear rate of the POM gear pair increased significantly, resulting in a rapid thermal bending failure. However, when the POM gears were loaded below the transition torque, the wear rates are very low, indicating the potential for long

service life with constant specific wear rate [3]. These gears were made by injection moulding process, but nearly identical behaviour and transition torques have been observed for machine cut polymer gears as well [4].

Using the same method, Fig. 9. compares wear rate against torque for gear pairs made from POM, PA46, PC (polycarbonate), HDPE (high density polyethylene) and PEEK, all running under dry conditions at 1000 rpm. All show wear rate transition torques. They are, in order of gear load capacity: PEEK (11 Nm), POM (8.5 Nm), PA46 (8.25 Nm), PC (6 Nm) and HDPE (4.5 Nm). It should be emphasised that these results are for pairs of the same material, not the polymer-steel combinations more commonly reported in the literature.

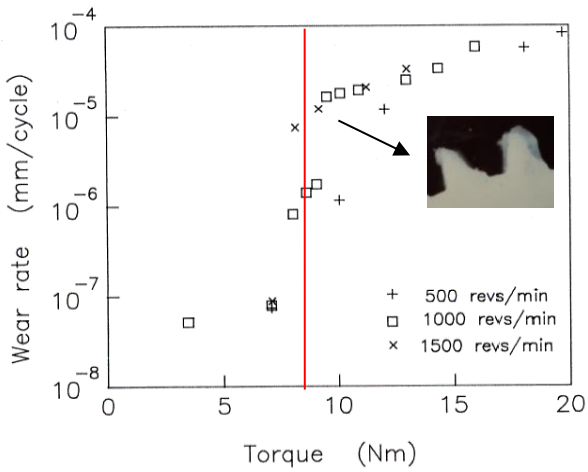

Fig.8 Polymer gear wear transition

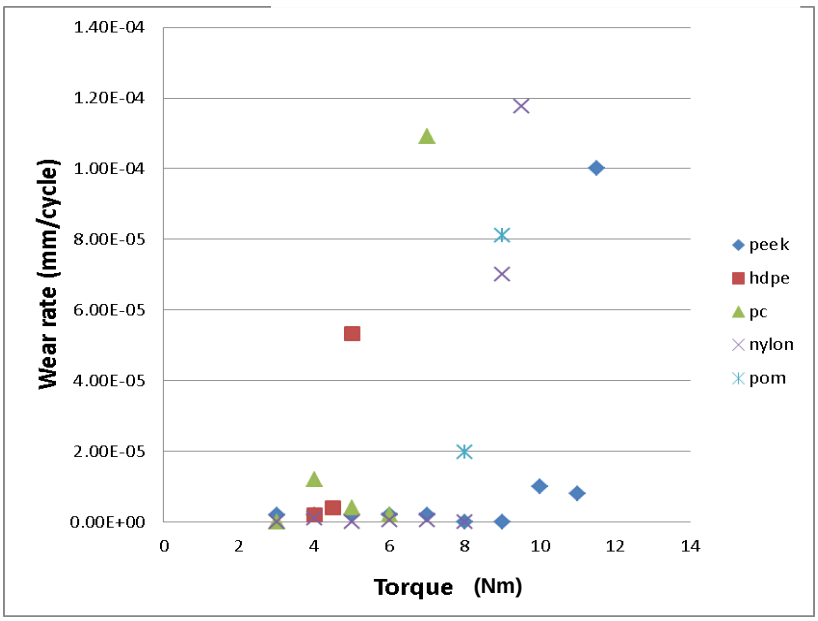

Fig.9 Wear rate against load for five same polymer gear pairs [10]

Fig. 10 shows typical SEM images for the worn surfaces of a PEEK gear, while Fig. 11 shows SEM results for a PA gear. Although the underlying mechanisms for the sudden wear rate increase seen in PEEK and PA gears are not clear at the moment, the high tip wear for both gears are expected to arise from high friction load in tooth tip regions [3].

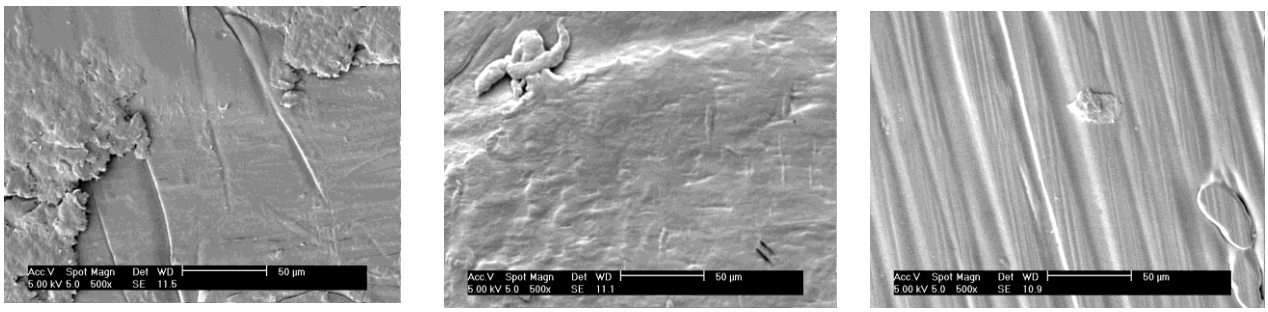

(a) Tip (b) pitch (c) root

Fig.10 PEEK gear tooth SEM results [10]

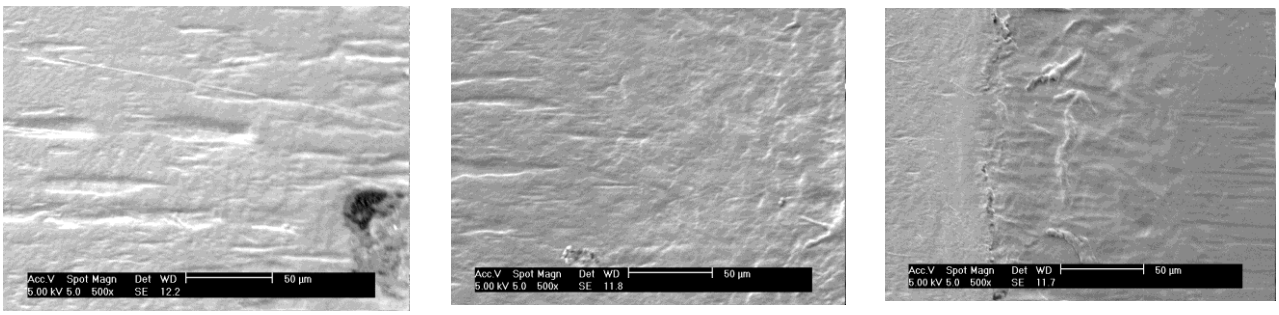

(b) Tip (b) pitch (c) root

Fig.11 PA gear tooth SEM results [10]

It is interesting to note the significant loading capacity increase shown in Fig. 12 for GFR POM gears, nearly 50%, when compared to unreinforced POM gears [11]. The increased tooth stiffness for the fibre reinforced gears made the main contribution for this load capacity increase. However, the gear failed rapidly soon after glass fibre fracture.

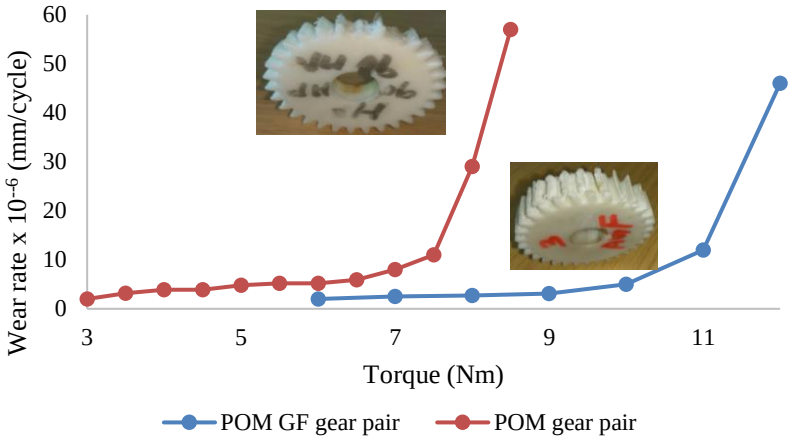

Fig.12 Wear rate comparison for POM and GFR POM gears [11]

4. Conclusions

A novel test rig and associated methodology has been developed, and shown to be effective, for continuous measurements of polymer composite gear wear and fatigue life. It is based on a back-to-back test configuration, but unlike the classical version used for steel gears, the block supporting the polymer test gears is pivoted to the instrument base. This block will rotate slightly as the gear tooth thickness is reduced. Combined with a moment arm and adjustable weight to provide the test load, this modification maintains a virtually constant torque on the test gears irrespective of tooth wear. Even more importantly given the thermal behaviours of polymer gears, the gear surface wear can be recorded continuously by using a capacitive or inductive sensor to monitor the pivot block motion. Although this approach measures gear teeth distortions (hysteresis bending) alongside the tooth surface wear, the gear tooth surface wear rate can be measured with good accuracy. Another novelty in the new rig concerns the use of a split mounting block to provide controlled adjustments of the relative positions of the two test gears and so enable investigations of the effect of practical levels of misalignment in polymer gear pairs. The underlying concepts and details of design for this unique test method have been described and justified. An illustrative range of typical tests on polymer gear performances demonstrate its capabilities. These cover a wide range of polymers (PC, HDPE, PA, POM, PEEK, GFR POM and PA) in dry and lubricated running at loads up to 16 N m and speeds of 500 rpm to 4275 rpm, similar and dissimilar engagements, and non-contact gear body temperature measurement. We advocate wider adoption, and potential refinement, of this novel method.

References

[1] L. Snyder, 'At the "PEEK" of the Polymer Food Chain', Gear Technology, pp26-28, June 2010.

[2] BS 6168, 'Specification for Non-metallic Spur Gears', British Standards Institution, 1987.

[3] K. Mao, 'A New Approach for Polymer Composite Gear Design', Wear, 262, pp 432–441, 2007.

[4] K. Mao, P. Langlois, Z. Hu, K. Alharbi, X. Xu, M. Milson, W. Li, C. J. Hooke and D. Chetwynd, ' The Wear and Thermal Mechanical Contact Behaviour of Machine Cut Polymer Gears', Wear, pp. 822-826, 2015.
[5] VDI 2736 - Thermoplastic gear wheels, cylindrical gears, calculation of the load-carrying capacity, 2013.
[6] H. Hachman and E. Strickle, 'Nylon Gears', Konstruktion, Vol.3, No.18, pp81-94, 1966.
[7] R. Gauvin, P. Girad and H. Yelle, 'Investigation of the Running Temperature on Plastic/Steel Gear Pairs', ASME Paper, 80-C2/DET-108, 1980.
[8] N. Tsukamoto, 'Investigation about Load Capacity of Nylon Gears', JSME, 27, No.229, 1984.
[9] E. Letzelter, M. Guingand, J. Vaujany and P. Schlosser, 'A new experimental approach for measuring thermal behaviour of nylon 6/6 gears', Polymer Testing, 29, pp1041–1051, 2010.
[10] K. Mao, P. Langlois, N. Madhav, D. Greenwood and M. Milson, 'Experimental Investigations of Polymer Composite Gear Performance', Gear Technology, November/December, pp68 - 72, 2019.
[11] K. Mao, D. Greenwood, R. Ramakrishnan, V. Goodship, C. Shrouti and P. Langlois, 'The Wear Resistance Improvement of Fibre Reinforced Polymer Composite Gear', Wear, pp1033-1039, 2019.
[12] A. P. Arun, A. P. Senthil Kumar, B. Giriraj and A. Faizur Rahaman, 'Gear Test Rig - A Review', International Journal of Mechanical & Mechatronics Engineering, pp16-26, 2014.
[13] N. A. Wright and S. N. Kukureka, 'Wear testing and measurement techniques for polymer composite gears', pp1567–1578, Wear, 2001.
[14] Esraa M. Afifi, Abou Bakr Elshalakny, T. A. Osman, Bahaa M. Kamel & H. Zian, 'Investigation of gear performance of MLNGPs as an additive on polyamide 6 spur gear', Fullerenes Nanotubes and Carbon Nanostructures, pp351-359, 2018
[15] S Yousef, A Khattab, M Zaki and T Osman, 'Wear characterization of carbon nanotubes reinforced polymer gears', IEEE Transactions on Nanotechnology, pp616-620, 2013
[16] S Yousef, T. A. Osman, M. Khattab, A. A. Bahr, and A. M. Youssef, 'A new design of the universal test rig to measure the wear characterizations of polymer acetal gears (spur, helical, bevel, and worm)', Advances in Tribology, http://dx.doi.org/10.1155/2015/926918, 2015.
[17] S Yousef, T. A. Osman, A H. Abdalla, G A. Zohdy, 'Wear Characterization of Carbon Nanotubes Reinforced Acetal Spur, Helical, Bevel and Worm Gears Using a TS Universal Test Rig', JOM-Springer, DOI: 10.1007/s11837-014-1268-5.
[18] M. Kodeeswaran, A. Verma, R Suresh and S. Senthilvelan, 'Bi-directional and uni-directional bending fatigue performance of unreinforced and carbon fiber reinforced polyamide 66 spur gears', International Journal of Precision Engineering and Manufacturing, pp1025-1033, 2016
[19] S Yousef, 'Polymer nanocomposite components: a case study on gears', Lightweight Composite Structures in Transport, Design, Manufacturing, Analysis and Performance, pp 385-420, 2016.