Adsorption Heat Pumps: Challenges and Future Perspectives

- **Dr Zak Tamainot-Telto**
- Sustainable Thermal Energy Technologies (STET)
- School of Engineering - University of Warwick
- Coventry CV4 7AL – UK

HPC Conference - Bilbao (Spain) - 10th – 13th April 2022

Introduction

- CO2 Emission
- Total: 180Mt CO_2 /year
- Heating: 87Mt CO_2 /year (48%)
- 29 million **Gas boilers** (85% Heating Systems)
- 1.3 New installed **Gas boilers** /year (Replacement and new buildings)
- Need of **Heat Decarbonisation** to meet 80% reduction of greenhouse gas emission by 2050.

Heat Pumps (HPs) including **Thermally Driven Heat Pumps (TDHPs)** are part of the solutions.

Advantages of TDHPs:

- Little or no load on Electrical Grid
- Renewable label (Biomass or Hydrogen)

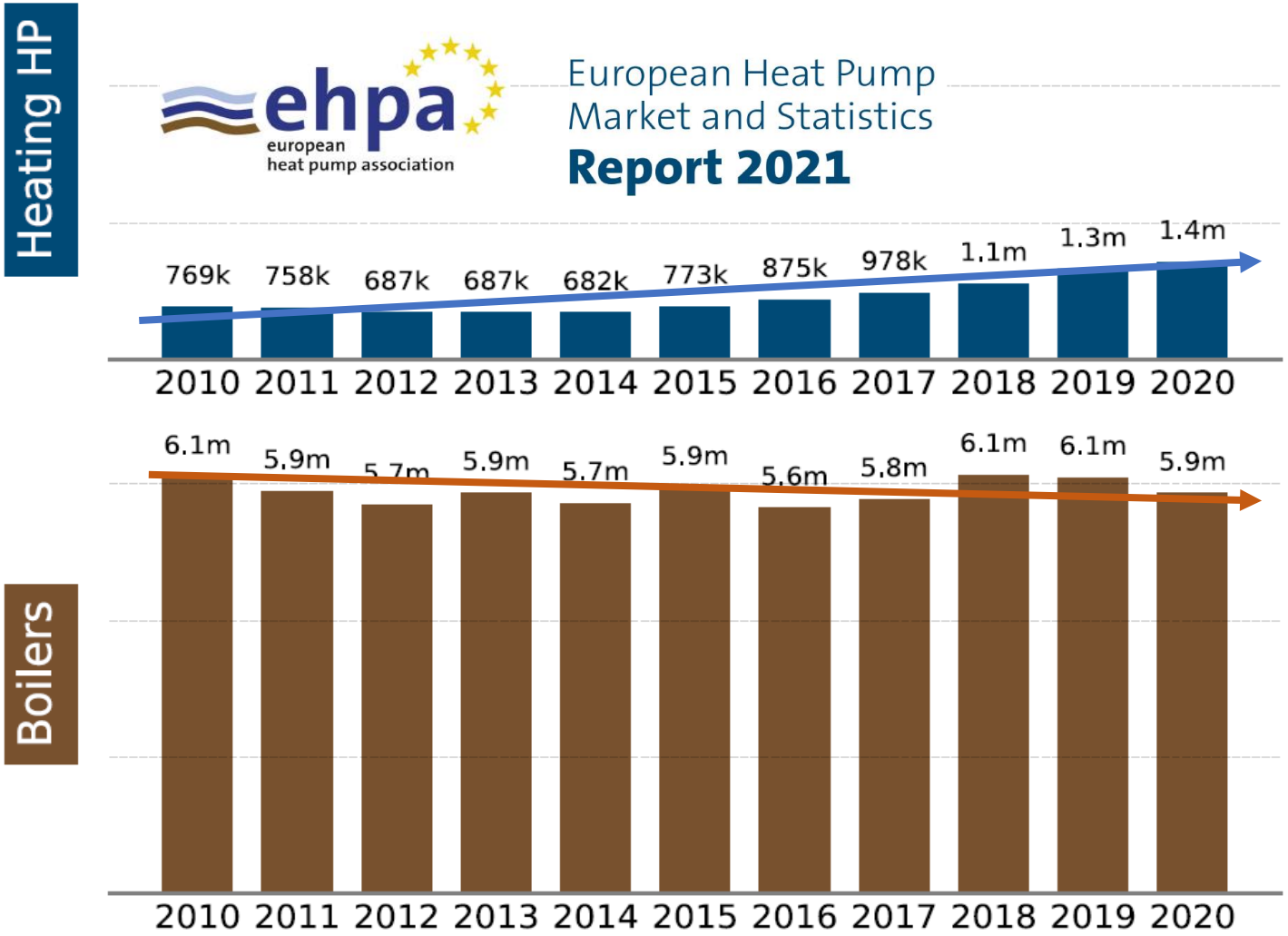

European Market trend: **Heating HPs** vs. **Boilers**

Introduction

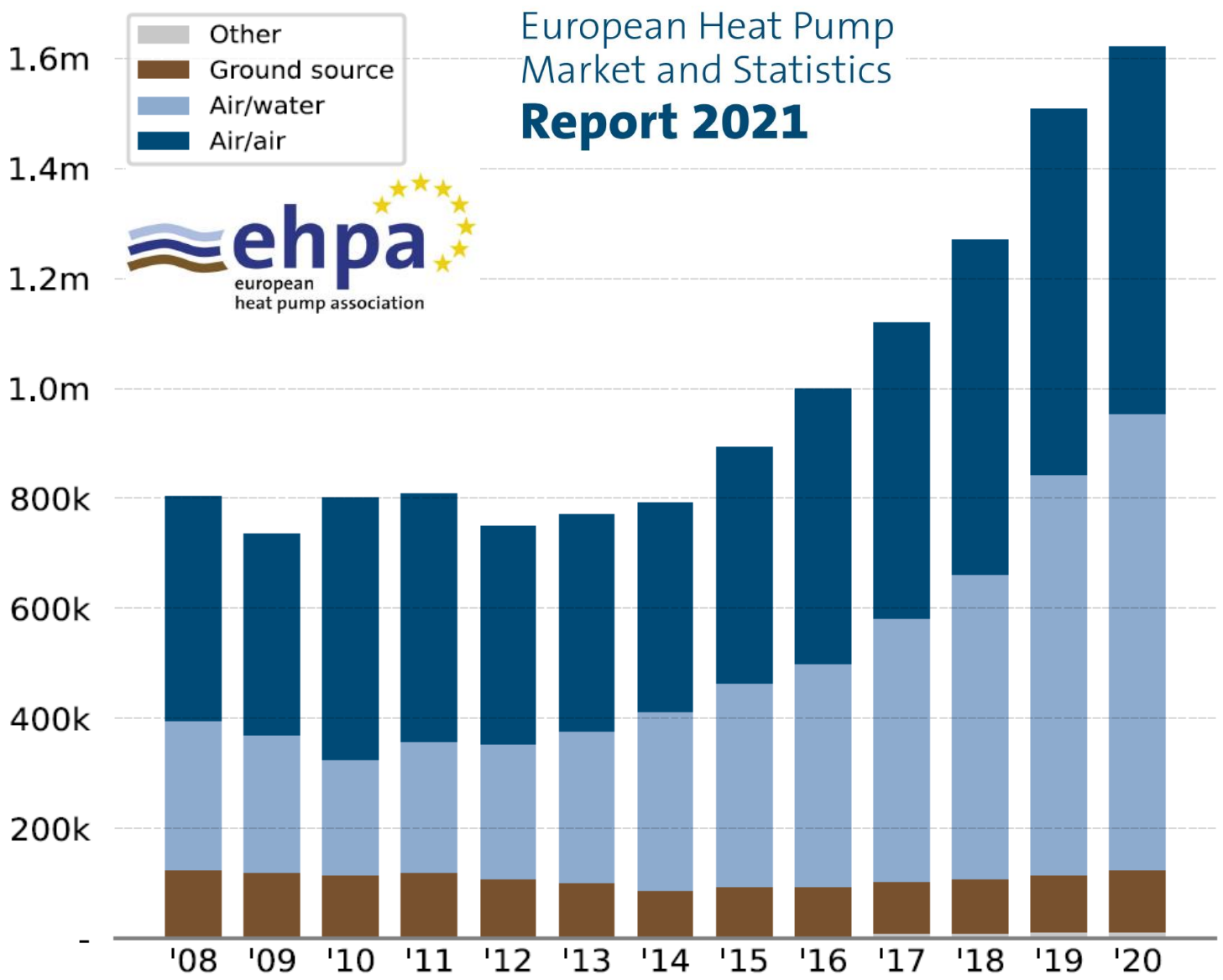

Introduction

- Space Heating (SH) and Domestic Hot Water (DHW)
- Residential and light commercial building sectors

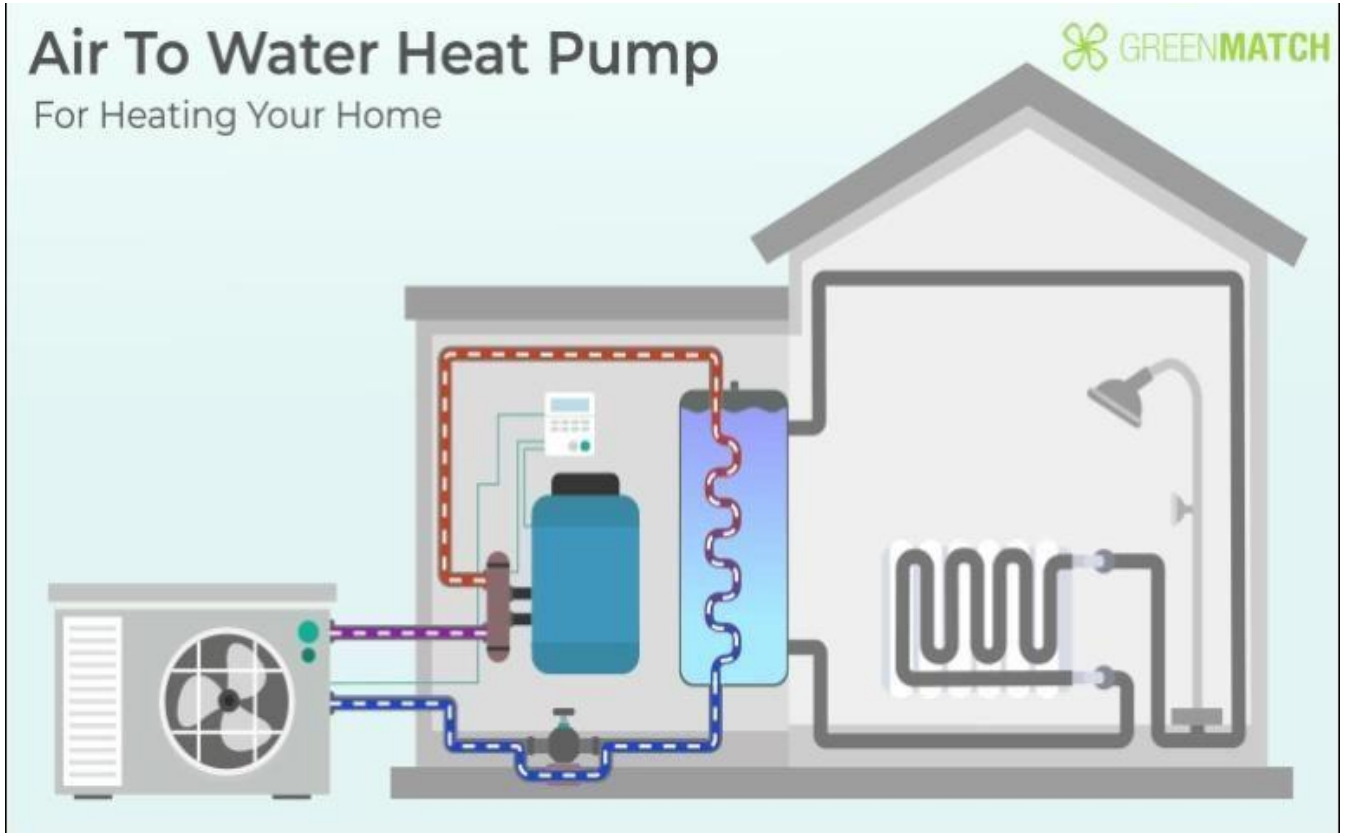

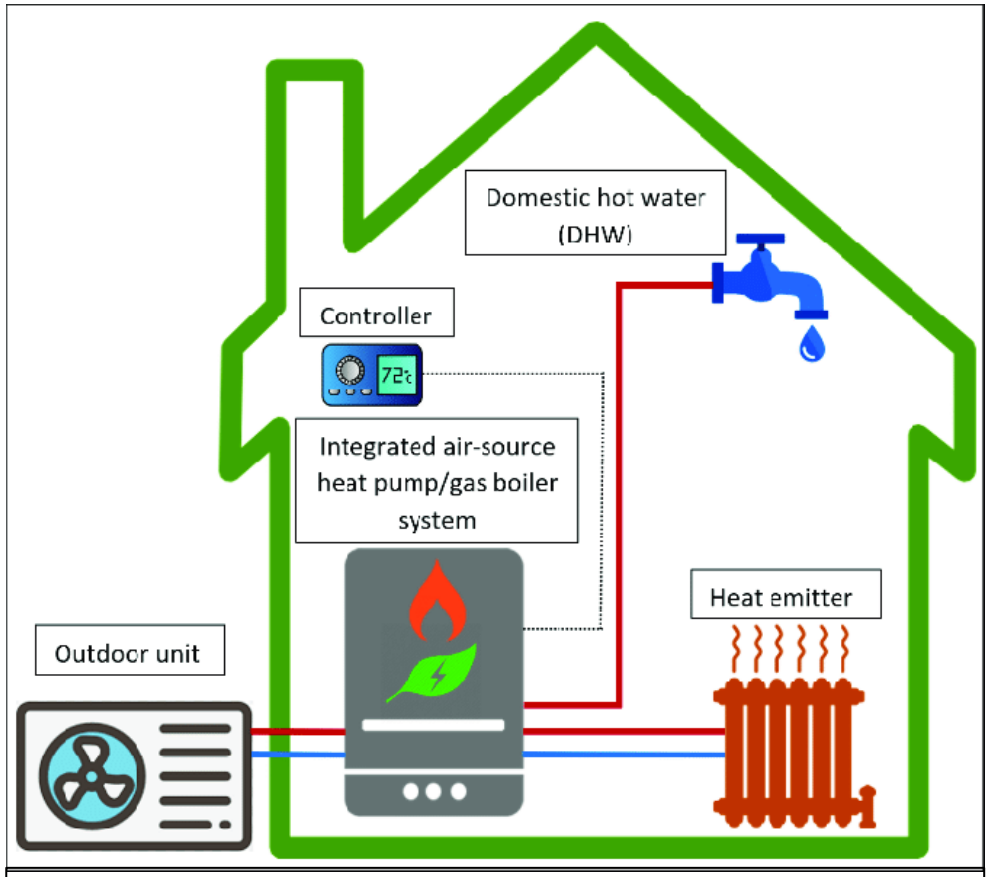

E3S Web of Conferences 111, 01064 (2019) CLIMA 2019
https://do i.org/10.1051/e3sconf/20191110106

Introduction

1. HP Technologies: An overview

2. What are the key factors that are holding back Adsorption HP Technology? Performance? Cost? Others?

3. Examples of ongoing projects (as pathway to short and long terms contribution Adsorption HPs)

4. Conclusions

1. HP Technologies: An overview

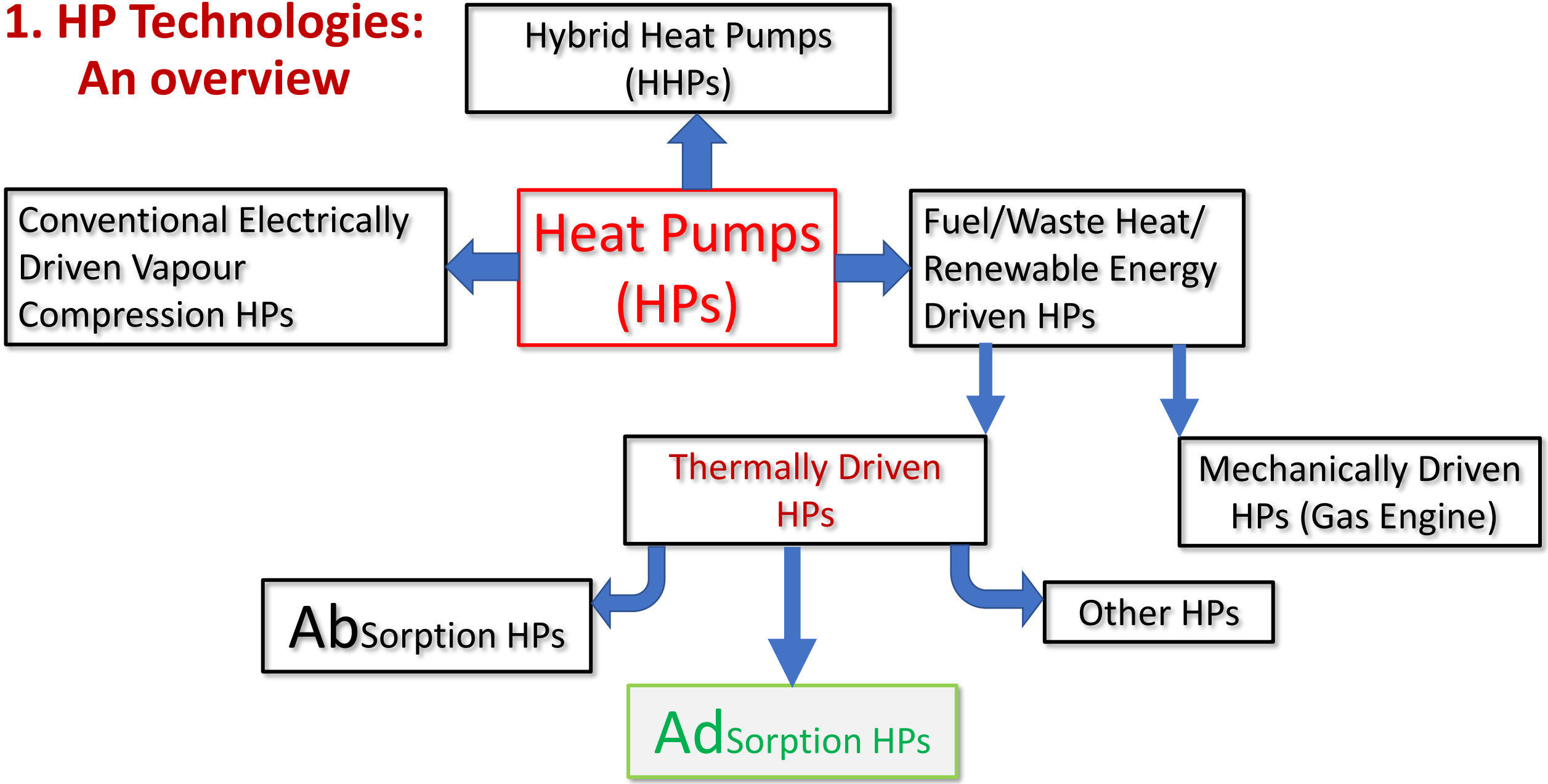

1. HP Technologies: An overview

Mechanical Compressor vs. Thermal Compressor

Hybrid Heat Pumps (HHPs)

Conventional Electrically Driven Vapour Compression HPs

Heat Pumps (HPs)

Fuel/Waste Heat/ Renewable Energy Driven HPs

Thermally Driven HPs

Mechanically Driven HPs (Gas Engine)

Other HPs

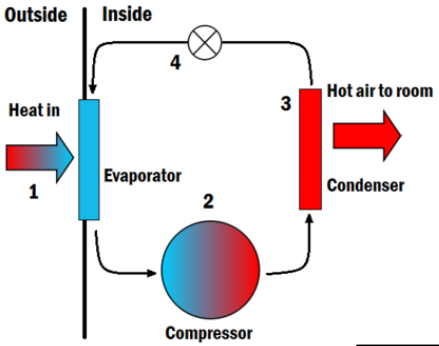

Heating Cycle

Absorption HPs

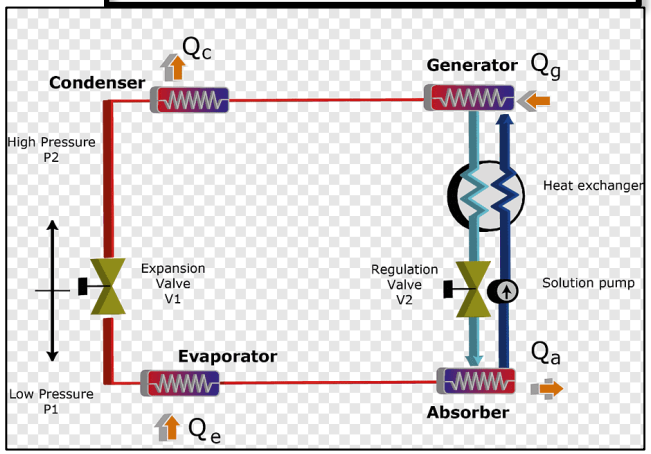

Adsorption HPs

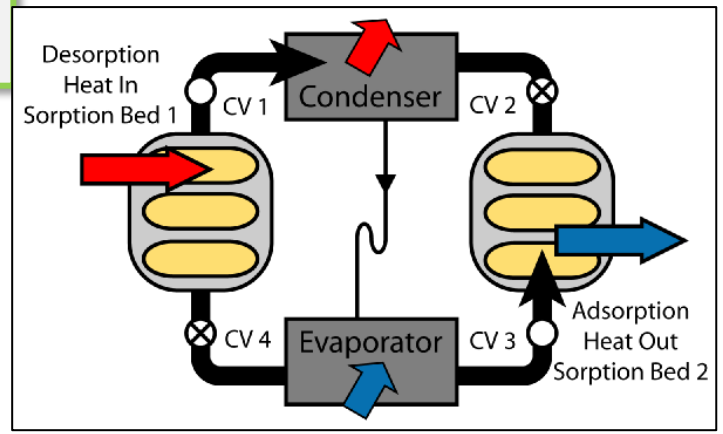

1. HP Technologies: An overview

Hybrid Heat Pumps (HHPs)

Conventional Electrically Driven Vapour Compression HPs

Heat Pumps (HPs)

Fuel/Waste Heat/ Renewable Energy Driven HPs

Thermally Driven HPs

Mechanically Driven HPs (Gas Engine)

Absorption HPs

Adsorption HPs

Other HPs

3. What are the Key factors that are holding back this technology?

Adsorption Heat Pump Performance?

Thermally Driven HPs

VS.

Conventional Electrically Driven Vapour Compression HPs

COP = 1.2 (Thermal)

VS.

COP = 1.3 (Thermal)

COP = 4.2 (Electrical)
ηtd = 0.88 (Transmission & Distribution)
ηt = 0.35 (Thermal)

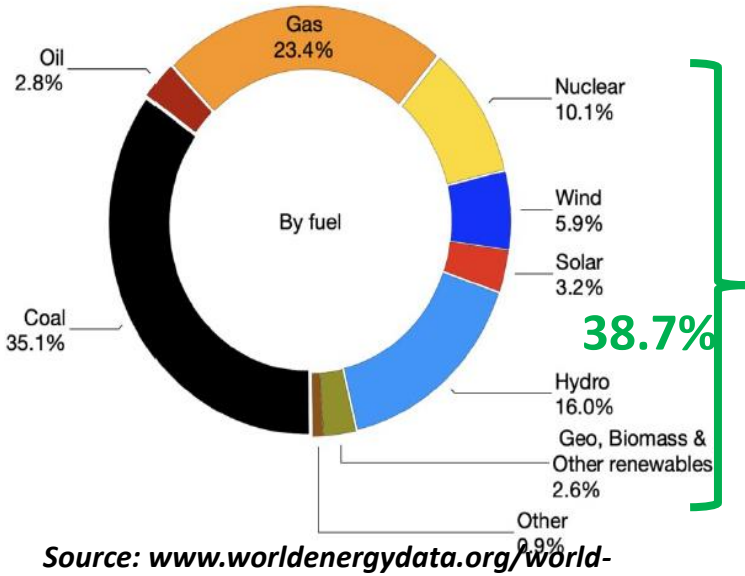

Source: www.worldenergydata.org/world-electricity-generation/

Adsorption Heat Pump Performance?

- **Marginal difference.**
- **Not really if Fossil Fuel is the source of electricity.**
- **Conventional Electrically Driven Vapour Compression HPs if renewable energy as source of electricity.**

3. What are the Key factors that are holding back this technology?

Adsorption Heat Pump cost? £, $, …
(Sum of Capital, Maintenance and Running)

- Adsorption HP
- Installation

- Revision
- Repair
- Inspection

- Fuel
- Electricity

Thermally Driven Adsorption HPs

VS.

Conventional Electrically Driven Vapour Compression HPs

Type of system	Cost per kW of heat output
ASHP (air to air and air to water)	£1,000 to £1,300
GSHP (open loop)	N/A
GSHP (closed loop)	N/A
LPHW boiler	N/A

Source: *Gas driven heat pump (publishing.service.gov.uk)*

Type of system	Cost per kW of heat output
ASHP (air to air and air to water)	£250 to £1,500
GSHP (open loop)	£1,000 to £2,000
GSHP (closed loop)	£1,500 to £3,500
LPHW boiler	£70 to £150

Source: Carbon Trust

3. What are the Key factors that are holding back this technology?

Adsorption Heat Pump cost? £, $, …
(Sum of Capital, Maintenance and Running)

- Adsorption HP
- Installation

- Revision
- Repair
- Inspection

- Fuel
- Electricity

Thermally Driven Adsorption HPs VS. Conventional Electrically Driven Vapour Compression HPs

	Natural Gas	Oil	LGP	Wood pallet	Coal
p/kWh	7.4	11.8	15.5	9.9	6.4
kg CO2e/kWh	0.215	0.298	0.240	0.053	0.398
Standing Charge (£/year)	99.35		62.84		

Source: energysavingtrust.org.uk

Electricity	Off-Peak	On-Peak	Standard
p/kWh	16.7	34.1	28.3
kg CO2e/kWh	0.231	0.231	0.231
Standing Charge (£/year)	165.80		165.48

Source: energysavingtrust.org.uk

3. What are the Key factors that are holding back this technology?

Adsorption Heat Pump cost? £, $, …
(Sum of Capital, Maintenance and Running)

- Adsorption HP
- Installation

- Revision
- Repair
- Inspection

- Fuel
- Electricity

Thermally Driven Adsorption HPs

VS.

Conventional Electrically Driven Vapour Compression HPs

- Little or No moving parts
- Complex layout

Fairly similar cost on balance: in the order of £200 to £500 per year

- Moving parts
- Simple layout

3. What are the Key factors that are holding back this technology?

Other Heat Technologies competing with Adsorption Heat Pump?

- **Viessmann** (Vitosorp)
- **Vaillant** (zeoTherm)

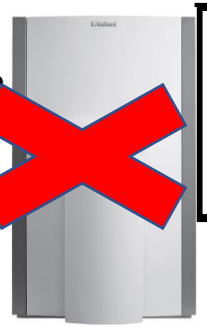

Thermally Driven Adsorption HPs VS. **Conventional Electrically Driven Vapour Compression HPs**

- **Bosch**
- **Viessmann**
- **Daikin**
- **Cool Energy**
- **Ideal**
- **Vaillant**
- **BAXI**
- **Fujitsu General**
- **Grant**
- **Lochinvar**
- **LG Electronics**
- **Mitsubishi Electric**
- **Nibe Energy Systems**
- **Panasonic**
- **……**

Thermally Driven Absorption HPs

- **Robur**
- **Bosch**
- **Viessmann**
- **Remeha**
- **Lochinvar**

Gas Driven Stirling Cycle HPs

- **Boostheat (Hybrid)**

Boilers

- **Worcester Bosch**
- **Viessmann**
- **Alpha**
- **Ideal**
- **Vaillant**
- **BAXI**
- **Glow-Worm**
- **Lochinvar**
- **Potterton**
- **Intergas**
- **Vokera**
- **Grant**
- **……**

•Boostheat (Hybrid)

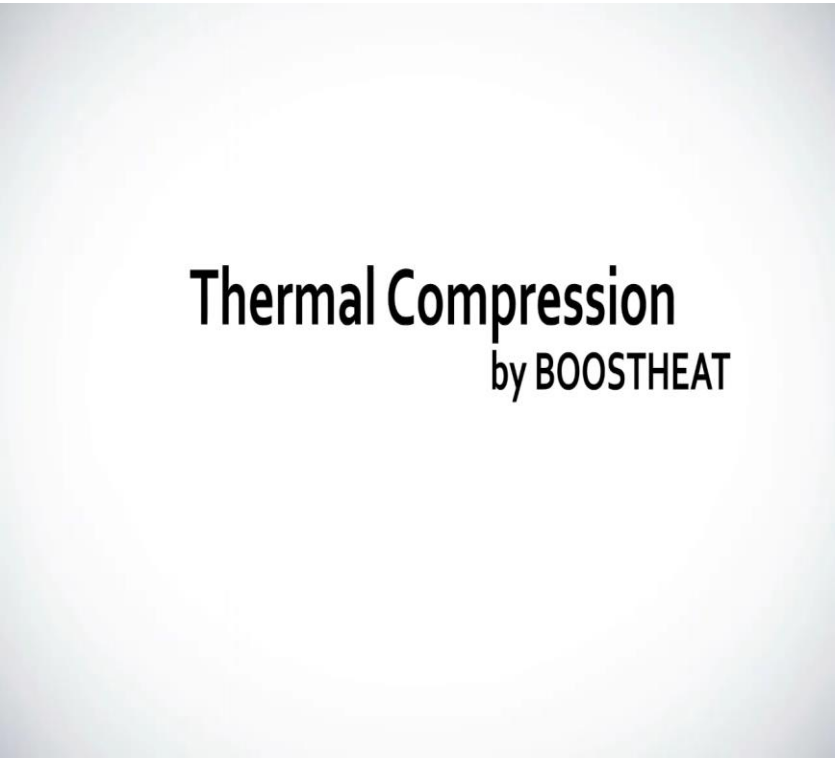

Thermal Compressor

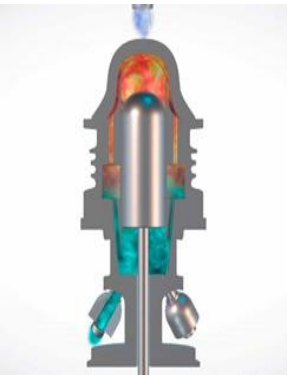

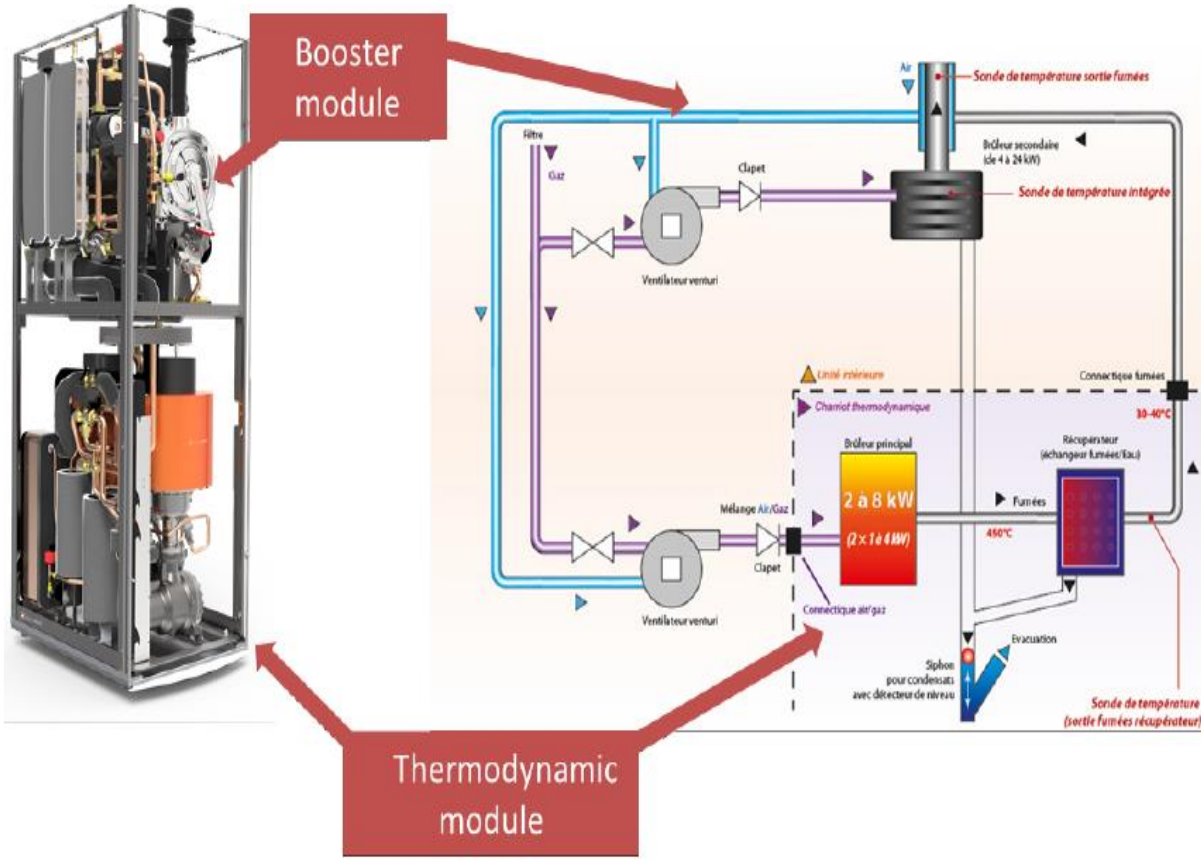

Synthesis of GUE (W55)

Ext. Temp. °C	Heating Curve °C/°C	Heat Output kW	HEAT PUMP (HP) Heat Output HP kW	HEAT PUMP (HP) Gas Input HP kW	HEAT PUMP (HP) GUE HP %	BOILER Heat Output Boiler kW	BOILER Gas Input Boiler kW	BOILER GUE Boiler %	GUE BH20 %
-10	55 / 41	20	7,25	6,39	**113%**	12,8	12,9	99%	**104%**
-7	52 / 39	17,7	7,43	6,04	**123%**	10,3	10,3	100%	**109%**
2	42 / 33	10,8	7,98	5,25	**152%**	2,79	2,69	104%	**136%**
7	36 / 29	6,9	6,87	4,15	**166%**	0,049	0,047	106%	**165%**
12	30 / 25	3,1	3,08	2,37	**130%**	0	0	-	**130%**
								Seasonal Gas Utilization Efficiency	**135 %**

Synthesis of GUE (W35)

Ext. Temp. °C	Heating Curve °C/°C	Heat Output kW	HEAT PUMP (HP) Heat Output HP kW	HEAT PUMP (HP) Gas Input HP kW	HEAT PUMP (HP) GUE HP %	BOILER Heat Output Boiler kW	BOILER Gas Input Boiler kW	BOILER GUE Boiler %	GUE BH20 %
-10	35 / 28	20	6,49	4,42	**147%**	13,5	12,9	104%	**115%**
-7	34 / 27	17,7	7,46	4,49	**153%**	10,2	9,72	105%	**121%**
2	30 / 25	10,8	10,4	6,09	**170%**	0,40	0,37	108%	**167%**
7	27 / 23	6,9	6,92	3,60	**193%**	0	0	-	**193%**
12	24 / 21	3,1	3,08	1,96	**157%**	0	0	-	**157%**
								Seasonal Gas Utilization Efficiency (SGUE)	**159 %**

Source: https://www.sunhorizon-project.eu/wp-content/uploads/2021/05/BOOSTHEAT_21-05_EN.pdf

3. Examples of ongoing projects

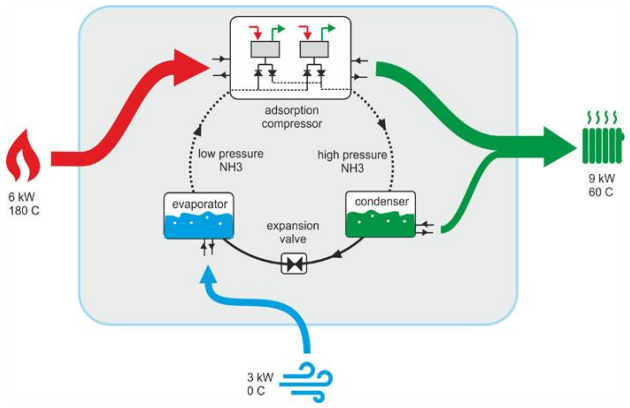

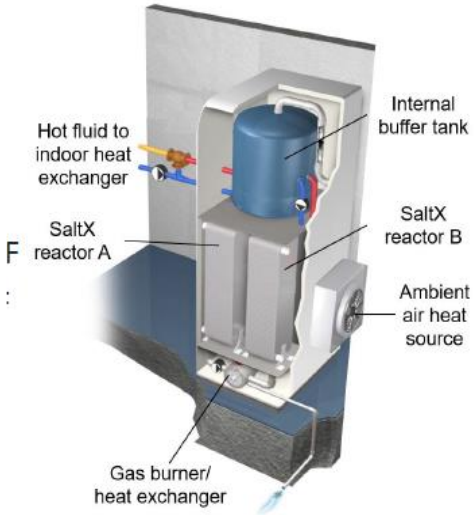

Fraunhofer ISE

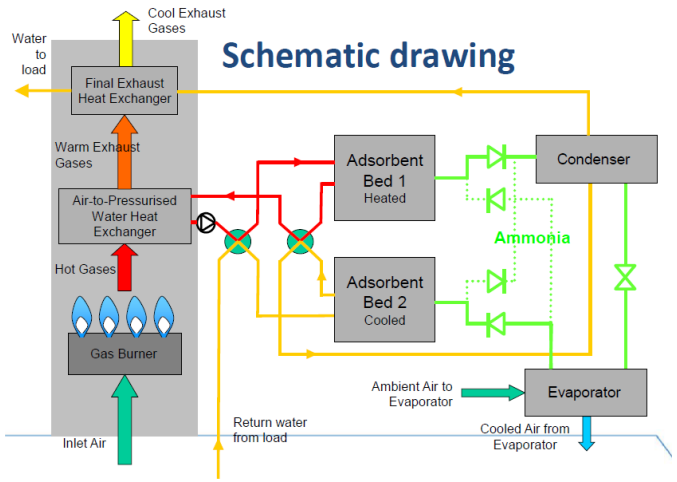

Cooll (Netherlands)
- AC-Ammonia
- Driving Temp: 180 °C
- Water Supply Temp: 60 °C
- Cycling Time: 5 minutes
- Air source

Source: [Technology | Cooll]

Oak Ridge National Lab (US)
- Nanocoated SaltX-Ammonia
- Driving Temp < 200 °C
- Water Supply Temp: 55 °C
- Air source
- 83,000 BTU/h ~ 24.3 kWth
- COP ~ 1.2-1.4

Fraunhofer-ISE (Germany)
- SAPO 34 Zeolite-Water
- Driving Temp <100 °C
- Water Supply Temp: 55 °C
- Ground/Air source
- 20 kWth
- COP ~ 1.2-1.4

UW-STET (UK)
- AC-Ammonia
- Driving Temp: 170 °C
- Water Supply Temp: 55 °C
- Air source
- 10 kWth
- COP ~ 1.2-1.4

Key focus point of R&D: Cost effective Thermal Compressor

3. Examples of ongoing projects

UW-STET (UK): Gas Fired Adsorption Heat Pump (Activated Carbon-Ammonia)

Fraunhofer-ISE (Germany): Gas Fired Adsorption Heat Pump (Zeolite-Water)

Oak Ridge National Laboratory (US): Gas Fired Adsorption Heat Pump (SaltX-Ammonia)

Cooll (Spin Off Company – University of Twente - Netherlands): Adsorption Heat Pump (Activated Carbon-Ammonia)

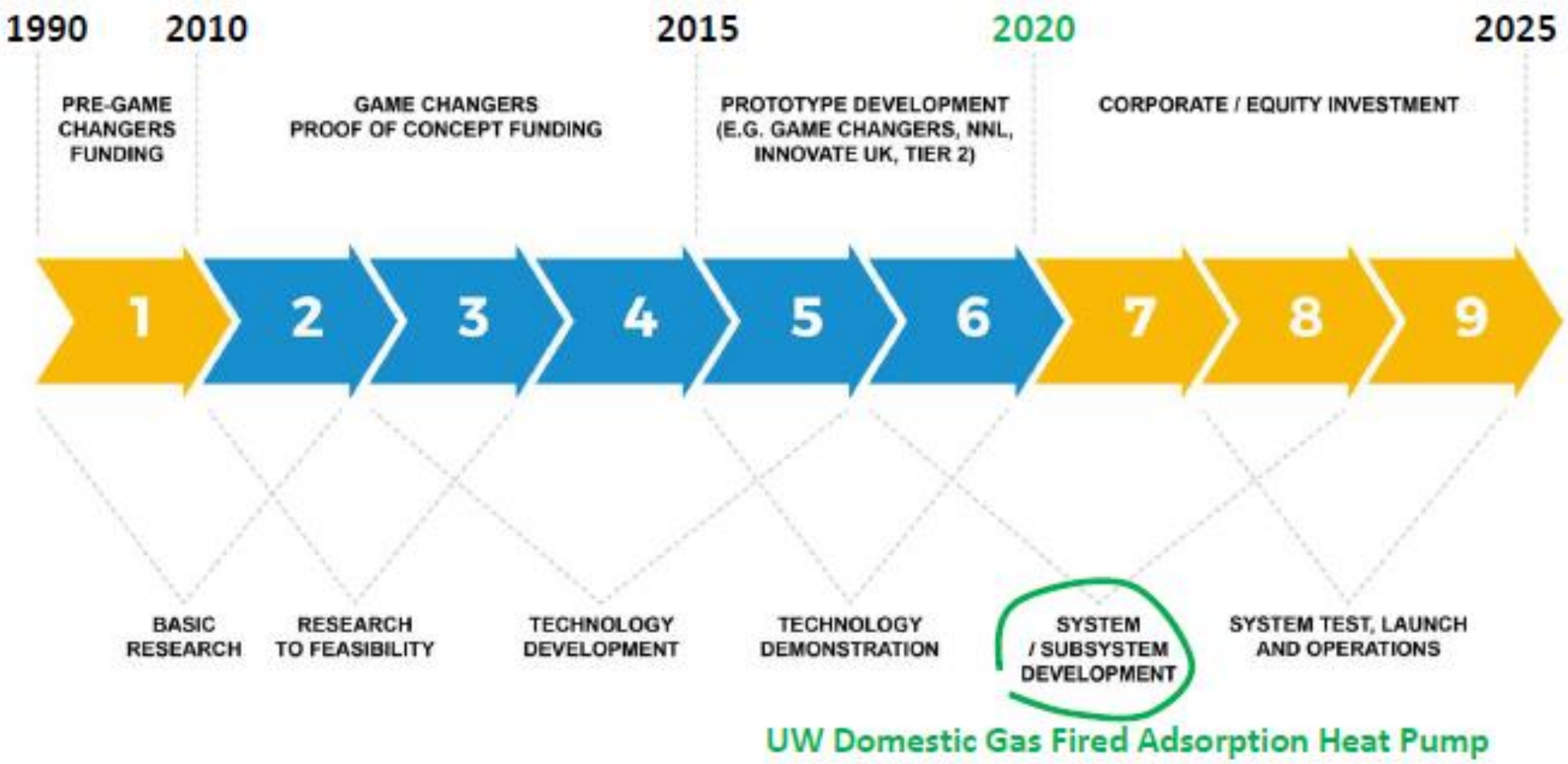

UW-STET (UK): Gas Fired Adsorption Heat Pump (Activated Carbon-Ammonia)

Generator design (Thermal compressor)

Shell and finned tube

Design Parameters:

- Tube diameter
- Tube pitch
- Carbon thickness
- Fin thickness

Detailed simulations in MATLAB

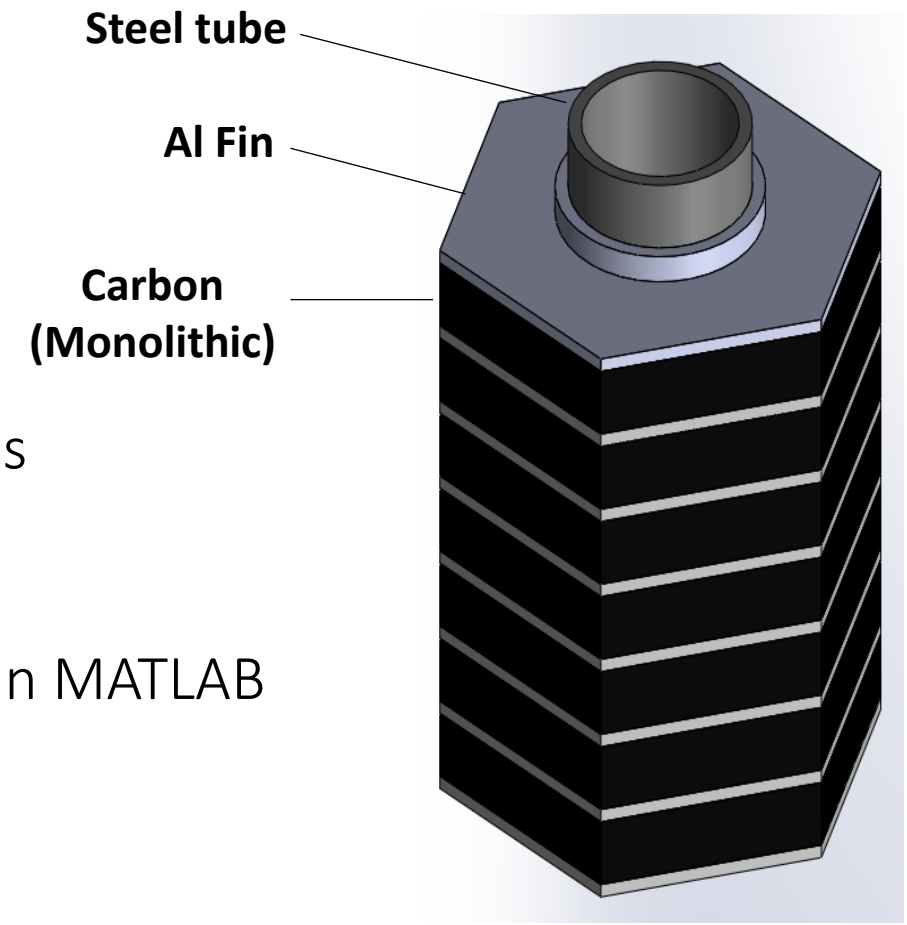

ICR2019 Critoph R.E.

UW-STET (UK): Gas Fired Adsorption Heat Pump (Activated Carbon-Ammonia)

Performance predictions

Target performance:

- Heating power 10 kW
- Total generator volume ≤ 10 litres
- Internal COP ≥ 1.4 (GUE ~1.25)
  - Heating water delivery temperature 55°C
  - Evaporating temperature 0°C

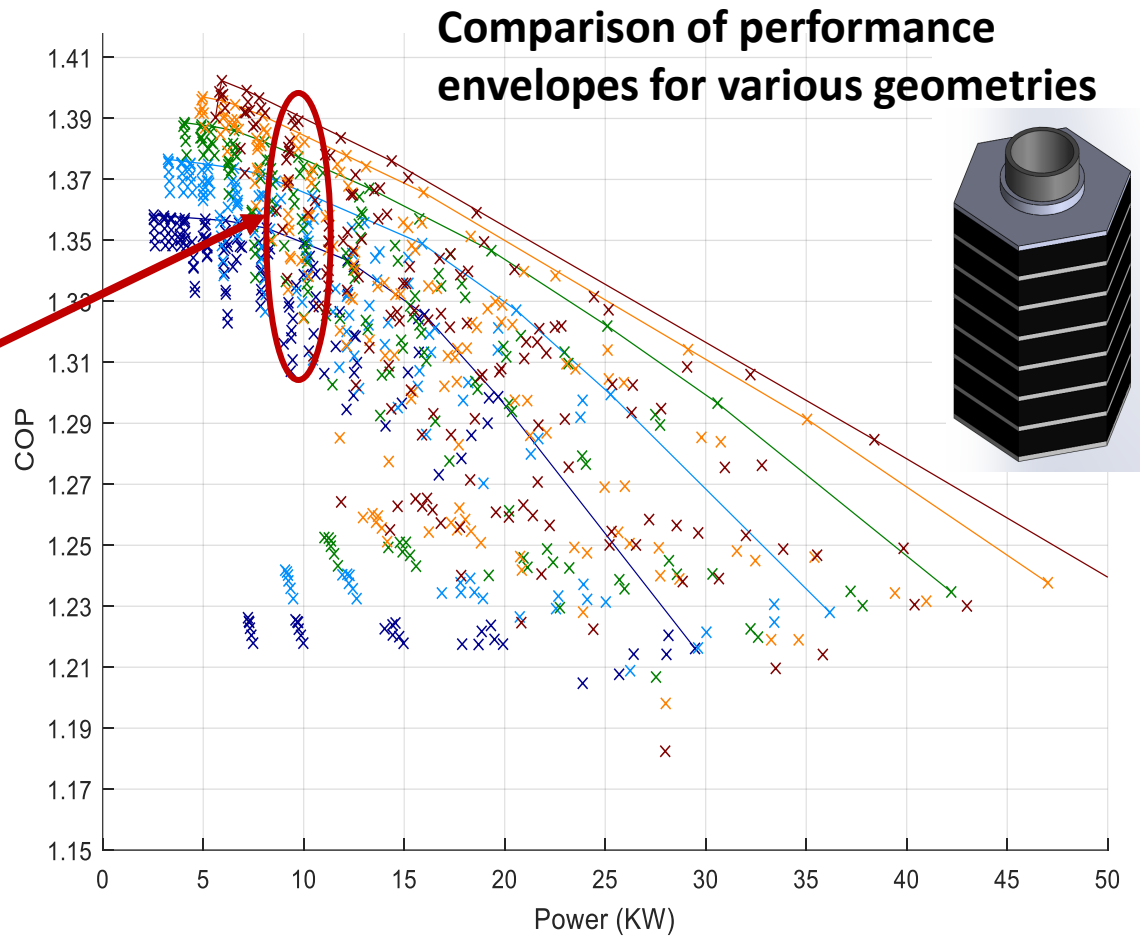

ICR2019 Critoph R.E.

UW-STET (UK): Gas Fired Adsorption Heat Pump (Activated Carbon-Ammonia)

Lab Prototype (2020)

COP ~ 1.2
(under target of 1.4)

UW-STET (UK): Gas Fired Adsorption Heat Pump (Activated Carbon-Ammonia)

Final Prototype with integrated boiler under construction (2022)

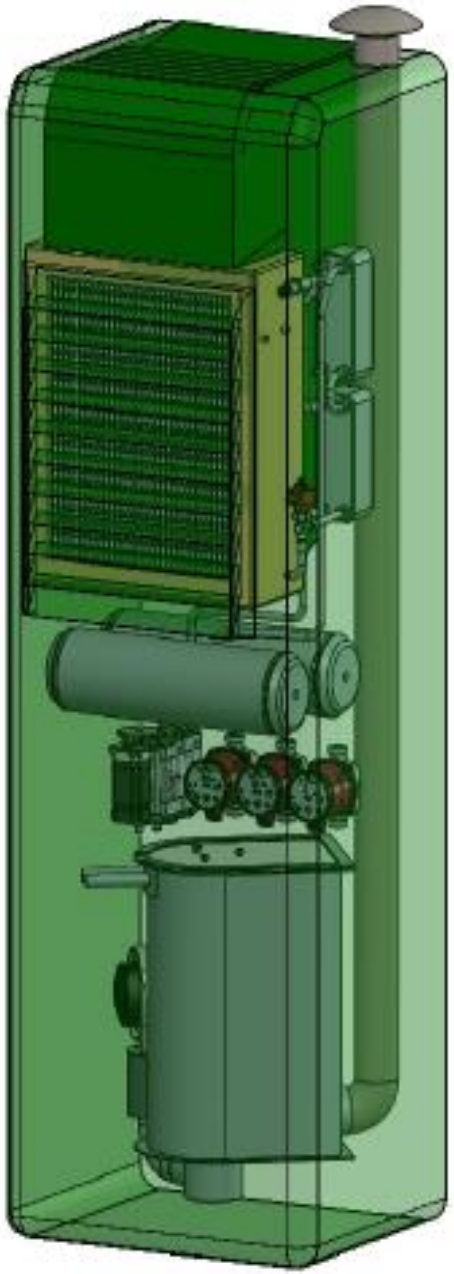

4. Conclusions

- **Performance: Not more or less a barrier.**

- **Cost (Capital/Running): Main barrier.**

- **Market competition: Main barrier (linked to cost).**

- **More work: R & D on cost effective thermal compressors**

WARWICK
THE UNIVERSITY OF WARWICK

Thanks