Diode Based IQ imbalance Estimation in Direct Conversion Transmitters

W. Li, Y. Zhang, J. Wang and L.K. Huang, J. Xiong, C. Maple,

Direct conversion transmitter is widely used in wireless systems for its inherent features of simple and low cost. In this architecture, inphase (I branch) and quadrature signal (Q branch) will be unconverted to RF frequency band by quadrature modulation. However, the drawback of direct conversion architecture is that it is sensitive to I/Q imbalance caused by the impairment of analog devices in I and Q branch. It then results in interferences in mirror frequencies which degrades the signal quality. Therefore, the accurate measurement of IQ imbalance is crucial. In this letter, we propose a diode based method to measure the broadband IQ imbalance which doesn't need additional measurement instrument. Following measurement results show the effectiveness of this method.

Introduction: The direct conversion architecture is widely adopted in radar, wireless communication systems because of its low-cost, low-power, small-size and flexibility. However, the impairment of practical devices in I and Q branch brings different gain and phase shift, which results in IQ imbalance problem. Therefore, IQ imbalance rejection is an important feature for direct conversion transmitters. Several methods to cope with transmitter IQ imbalance have been reported [1-4]. In [1-3], there are different means to measure the IQ imbalance by additional demodulator which brings extra cost and impairment of feedback path. [4] proposed a measurement approach which makes use of the diode in the envelop detector, however it is only suitable for QPSK and CPM systems. [5] proposed another diode based estimation algorithm which could estimate the IQ imbalance without knowing the properties of diode. However, the computation complexity is relatively high because of the matrix inversion operation when a large number of samples are involved. This letter proposes a diode based IQ imbalance measurement method with low implementation cost and low computation complexity.

Fig. 1 shows the model of quadrature modulator. A and θ are the gain and phase imbalance between I and Q branch. I_0 and Q_0 is the LO leakage. The overall gain of the transmitter is modelled as h.

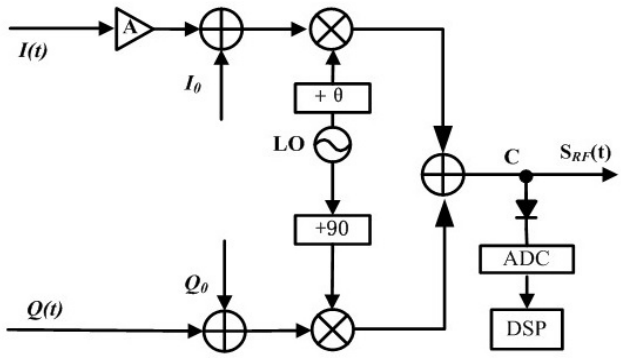

Fig. 1 *IQ imbalance model*

The signal $I(t)$ and $Q(t)$ which represents the real and image of the baseband complex signal is injected to I and Q branch respectively and then upconverted to RF frequency by the mixers. The RF signal at point C can be expressed as:

$$\mathbf{S}_{RF}(t) = \Re\left\{\left[Ae^{j\theta}\cdot I(t) + j\cdot Q(t) + I_0 + j\cdot Q_0\right]\cdot e^{j2\pi f_c t}\right\} * h \tag{1}$$

where f_c is the carrier frequency. Then the diode converts the bandpass RF signal to a baseband signal and a higher frequency signal by the intermodulation between different tones. The output of the diode can be expressed as:

$$\mathbf{S}_{diode}(t) = k\mathbf{S}_{RF}^2(t) \tag{2}$$

where k is a constant determined by the device property. Due to second order property, the information of A, θ, I_0 and Q_0 can be obtained from $\mathbf{S}_{diode}$.

Proposed method:
For an interested frequency, we design two test tones whose frequency f_d and f_r are closed to each other and the IQ imbalance at two tones can be regarded as the same. Therefore, the intermodulation product of the two tones which carries information of A and θ can be obtained as the following steps:
1) Transmit the signal $I_1(t) = \cos(2\pi f_d t) + \cos(2\pi f_r t)$ and $Q_1(t) = -\sin(2\pi f_r t)$ on I and Q branch. Then (3) can be rewritten as:

$$\mathbf{S}_{diode1}(t) = k\mathbf{S}_{RF1}^2(t) \tag{3}$$

where

$$\begin{aligned}\mathbf{S}_{RF1}(t) =& \Re\Big\{(I_0 + jQ_0)e^{j2\pi f_c t} \\ &+ \frac{1}{2}\left(Ae^{j\theta}+1\right)e^{j2\pi(f_c+f_r)t} + \frac{1}{2}\left(Ae^{j\theta}-1\right)e^{j2\pi(f_c-f_r)t} \\ &+ \frac{1}{2}Ae^{j\theta}(e^{j2\pi(f_c+f_d)t} + e^{j2\pi(f_c-f_d)t})\Big\} * h\end{aligned} \tag{4}$$

Apply FFT to $\mathbf{S}_{RF}(t)$, the complex response of the tone frequency $f_i = f_d - f_r$ is:

$$V_{f_i 1} = \left[A^2 + jA\sin\theta\right]\cdot Ke^{j\varphi} \tag{5}$$

where $Ke^{j\varphi_1}$ is the overall gain of the transmitter and diode.
2). Similarly, transmit the signal $I_2(t) = \cos(2\pi f_r t)$ and $Q_2(t) = -(\sin(2\pi f_d t) + \sin(2\pi f_r t))$, we can get the complex response of the tone at frequency $f_i = f_d - f_r$ is

$$V_{f_i 2} = [1 - jA\sin\theta]\cdot Ke^{j\varphi} \tag{6}$$

3). In (5) and (6), $Ke^{j\varphi}$ is still unknown. This parameter can be seen as common gain between I and Q branch. Thus it can be obtained by adjust signal in Q branch. In addition, the LO leakage will also be estimated in this step. Transmit the two signals separately: $I_3(t) = 0$, $Q_3(t) = -a_3\cdot[\sin(2\pi f_d t) + \sin(2\pi f_r t)]$ and $I_4(t) = 0$, $Q_4 = -a_4[\sin(2\pi f_d t) + \sin(2\pi f_r t)]$, the corresponding complex amplitude of the tone and frequency $f_i = f_d - f_r$ for the two signals are

$$V_{f_i 3} = a_3^2\cdot Ke^{j\varphi} \tag{7}$$
$$V_{f_i 4} = a_4^2\cdot Ke^{j\varphi} \tag{8}$$

Thus, $Ke^{j\varphi}$ can be calculated:

$$\hat{K}e^{j\hat{\varphi}} = \frac{V_{f_i 4} - V_{f_i 3}}{a_4^2 - a_3^2} \tag{9}$$

4). Estimation of LO leakage. This step will be implemented after the compensation of IQ imbalance to minimize the influence of A and θ. Transmit signals $I_5(t) = I_{off5}$, $Q_5(t) = Q_{off5}$ and $I_6(t) = I_{off6}$, $Q_6(t) = Q_{off6}$. Assuming that I and Q branch have been compensated, the complex gain and f_d of signal 5 and 6 can be expressed as:

$$V_{loi} = I_{loi} + j\cdot Q_{loi} \tag{10}$$

where

$$I_{loi} = G\cos(\phi)(I_0 + I_{offi}) - G\sin(\phi)(Q_0 + Q_{offi}) \tag{11}$$
$$Q_{loi} = G\cos(\phi)(I_0 + I_{offi}) + G\sin(\phi)(Q_0 + Q_{offi}) \tag{12}$$

$i = 5, 6$; $Ge^{j\phi}$ are the path gain at f_d. Note that the each of the above transmission is synchronized by a common reference signal.
The estimation of A, θ, I_0 and Q_0 can be obtained from (5), (6), (9) and (10):

$$\hat{A} = \sqrt{\frac{V_{f_i1} + V_{f_i2}}{\hat{K}e^{j\hat{\varphi}}} - 1} \tag{13}$$

$$\hat{\theta} = \arcsin\left[-\frac{1}{j\hat{A}} \cdot \left(1 - \frac{V_{f_i2}}{\hat{K}e^{j\hat{\varphi}}}\right)\right] \tag{14}$$

$$I_0 = \frac{K_1 \cdot I_{lo5} + K_2 \cdot Q_{lo5}}{K_1^2 + K_2^2} - I_{off5} \tag{15}$$

$$Q_0 = \frac{K_1 \cdot Q_{lo5} - K_2 \cdot I_{lo5}}{K_1^2 + K_2^2} - I_{off5} \tag{16}$$

where

$$K_1 = G \cdot \cos\phi = \frac{I_{lo6} - I_{lo5} + Q_{lo6} - Q_{lo5}}{2 \cdot (I_{off6} - I_{off5})}$$

$$K_2 = G \cdot \sin\phi = \frac{Q_{lo6} - Q_{lo5} - I_{lo6} + I_{lo5}}{2 \cdot (I_{off6} - I_{off5})}$$

Results: The algorithm was tested on Aeroflex signal generator whose circuit is not calibrated and the inherent IQ imbalance and LO leakage is shown in Fig. 2. Two tones with frequency $f_d = 20KHz$ and $f_r = 19KHz$ were used. The tones were generated and upconverted to 1 GHz by Aeroflex PXI 3050 signal generator. The diode output is digitized by its internal ADC. $\hat{A}$ and $\hat{\theta}$ is estimated using above algorithm and then applied into the compensator in [5]. The measured spectrum of signal before and after compensation is show in Fig. 2 and Fig. 3 where the *Marker 1* and *1R* represent the image and desired tones. It reveals that the image rejection ratio (IRR) can achieve 86 dB which indicates the effectiveness of the algorithm proposed in this letter. As to the computation complexity, the proposed method consumes quite a few multiplication and addition operation whereas computation complexity of the method in [5] is $O(n^3)$ because of matrix inversion operation.

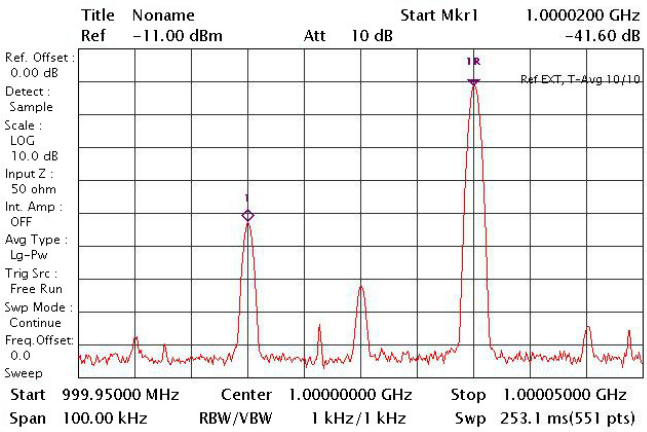

Fig. 2 *Spectrum with IQ imbalance before compensation*

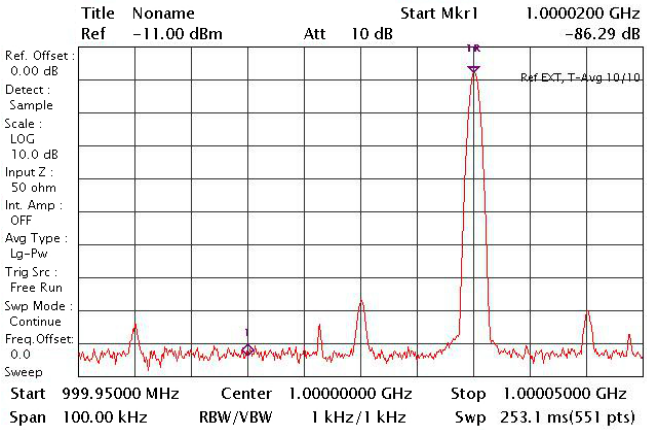

Fig. 3 *Spectrum with IQ imbalance after compensation*

Table 1 also listed the measured IRR before and after compensation for different carrier frequency and bandwidth. It shows this algorithm gives good estimation for both narrow and wideband signals for different carriers.

Table 1: Measured IRR before and after compensation for different f_d and LO in dB

LO(GHz) / f_d(KHz)	2		4	
	Before	After	Before	After
500	34.12	70.42	38.15	69.59
1000	33.47	63.56	37.94	68.03
5000	34.78	56.12	38.58	54.27

Conclusion: This paper proposes a diode based low cost IQ imbalance estimation method. This method estimates the IQ imbalance of mixer using the diode which is commonly used as power detector of direct conversion transmitter. The computation complexity for each interested frequency point is low. Measurement results show that it can achieve good IRR which reveals the effectiveness of this algorithm.

W. Li, Y. Zhang and C. Maple (Institute for Research in Applicable Computing, University of Bedfordshire, Luton, LU1 3JU, UK)
J. Wang and L.K. Huang (Aeroflex, Stevenage, SG1 2AN UK,)
J. Xiong (Shanghai Jiao Tong University, Shanghai, China)
E-mail: wei.li@beds.ac.uk

References

1 L. Anttila, M. Valkama, M. Renfors. : 'Frequency-Selective I/Q Mismatch Calibration of Wideband Direct-Conversion Transmitters', IEEE Trans. Circuits Syst. II, Exp. Briefs, vol. 55, no. 4, pp. 359–363, Apr. 2008
2 J. Luo, A. Kortke, and W. Keusgen, "Joint calibration of frequency selective time variant I/Q-imbalance and modulator DC-offset error in broadband direct-conversion transmitters," in Proc. IEEE ICCCAS, San Jose, CA, Jun. 2009, pp. 255–259.
3 J. K. Cavers, "New methods for adaption of quadrature modulators and demodulators in amplifier linearization circuits," IEEE Trans. Veh. Technol., vol. 46, no. 3, pp. 707–716, Aug. 1997.
4 M. Faulkner, T. Mattsson, and W. Yates, "Automatic adjustment of quadrature modulators," Electron. Lett., vol. 27, pp. 214–216, Jan. 1991.
5 S. Burglechner, G. Hueber, A. Springer. : 'On the Estimation and Compensation of IQ Impairments in Direct Conversion Transmitters', *Proc. European Wireless Techn. Conf., Amsterdam, The Netherlands, pp. 69-72, Oct. 2008*