DESIGN STUDIES OF MODEL REFERENCE ADAPTIVE CONTROL AND IDENTIFICATION SYSTEMS

by

CHANG-CHIEH HANG

A Thesis

submitted to the University of Warwick

for the degree of Doctor of Philosophy

NOVEMBER 1973

STATEMENT

The work presented in this Thesis has not been submitted for another degree of this or any other University. It is original with the exceptions stated below:

(i) The work in Chapter 1 is a review and commentary on the existing design methods for model reference adaptive systems.

(ii) In Chapter 2, the performance comparison of M.I.T. and Liapunov designs with step and sinusoidal inputs was reported in the candidate's M.Sc. dissertation. This work is reproduced here for the sake of completeness. The performance study for stochastic inputs and the inclusion of three other designs are new.

(iii) Elsewhere in the thesis ideas, results and examples which are due to other authors are clearly acknowledged in the references.

CHANG-CHIEH HANG

NOVEMBER 1973.

ABSTRACT

This thesis sets out to compare five well known design rules for the design of model reference adaptive systems. These are the M.I.T. rule, the Liapunov synthesis, the gradient rules of Dressler and Price, and the Monopoli design rule. A systematic performance comparison is made using two low order gain adjustment systems simulated on a digital computer. Step, sinusoidal and stochastic input signals are used and the system state variables and performance criteria are all expressed as dimensionless quantities. The results clearly demonstrate the superior performance of the Liapunov and Monopoli designs. The main disadvantage of other designs is that the dimensionless performance criteria is not a monotonic decreasing function of the dimensionless gain parameter. An analysis of the noisy case is then performed and this further points out the flexibility of the Liapunov synthesis.

The next objective of the research is to extend the scope of application of the Liapunov designs. First a modification of the usual design algorithm for multivariable systems is made so that a wider class of plants, in which the adjustable parameters may appear simultaneously in two or more elements of the plant and control matrices, can be readily treated. Examples are given to illustrate the design procedures and the typical performance of such designs. Secondly, the simultaneous parameter and state estimation system using model reference methods is investigated. Landau's hyperstability design, which can be shown to be equivalent to the Liapunov design, is preferred for this problem. To distinguish this design from the well known Generalized Equation Error (G.E.E.) design, we have called it the Stable Response Error (S.R.E.) design. The practical difficulty of

using this globally stable design rule is found to be the implementation of the series (derivative) compensator. It is then shown how the problem is solved by using the state variable filters. Various simulation results substantiate the characteristics (namely unbiased estimates and very fast convergence) of the resulting design. The recovery of the simultaneous state estimates when the state variable filters are used with the S.R.E. design is then considered. With a moderate rate of convergence, the quality of the state estimates is found to be good. The main disadvantage of the S.R.E. method is that the range of parameter variations must be known a priori in order to design the series compensator which ensures the global stability. Finally, the extensions of the S.R.E. method to treat nonlinear and multivariable systems are presented. The main effort here is to find the appropriate structures of the estimation model.

To conclude the thesis, a real case study is presented. This is the modelling of a nonlinear, third order internal combustion engine by a linear, first order model. The parameters of the model are adjusted according to the S.R.E. design rule. The practical results obtained demonstrate the feasibility of using the model reference method in a real physical system. Then some of the experiments are repeated with the estimation system based on the G.E.E. design rule. The results are found much inferior to those of the S.R.E. design.

ACKNOWLEDGEMENTS

The author wishes to express his deepest gratitude to Professor P.C. Parks who supervised this research work, for his guidance and encouragement throughout its progress. He is also indebted to The Royal Commission For The Exhibition of 1851, for the financial assistance in the form of an Overseas Scholarship, and to the British Council, for the granting of a Fees Award. Thanks are also due to Professor R.V. Monopoli (University of Massachusetts), Professor I.D. Landau (ALSTHOM Research Laboratory and University of Grenoble) and Professor J.L. Douce (University of Warwick) for their encouragement and many useful discussions. Finally, his thanks go to his colleague, Mr. J.N. Devlukia, for his assistance in the experiments on the internal combustion engine and to Mrs. V. Carroll for her patience in typing this thesis.

LIST OF CONTENTS

Page No.

Page No.

Page No.

CHAPTER 1 - INTRODUCTION

1.1. BACKGROUND

The model reference adaptive control (M.R.A.C.) technique has been a popular approach to the control of systems operating in the presence of parameter and environmental variations. In such a scheme, the desirable dynamic characteristics of the plant are specified in the reference model and the input signal or the controllable parameters of the plant are adjusted, continuously or discretely, so that its response will duplicate that of the model as closely as possible. The identification of the plant dynamic performance is not necessary and hence a fast adaptation can be achieved.

In the last decade or so, the design methods for M.R.A.C. systems have been dominated by the so called M.I.T. rule and many attempts have been reported to implement the resulting design in real physical systems. However, more often than not, the designer finds himself confronted with a complex stability problem or inadequate performance of the adaptive loop and all these limit the widespread application of M.R.A.C. techniques although it is thought to be an attractive alternative to many conventional methods. In the same period, other new design methods have been developed to overcome the shortcomings of the M.I.T. rule and the literature is flooded with new proposals. In fact the situation has reached a stage where the designer is fairly confused about the status of the various methods now available.

Recently the concept of model reference has been regarded more generally than it was first being used for in adaptive control. For instance, it can be readily shown that the well known Kalman filter and the Luenberger observer can be reformulated in the framework

of parallel model reference systems. Two important methods of system identification namely the equation error method and the response error method can be formulated as a series-parallel and parallel model reference systems respectively. Also the recently popularized method of compensating multivariable systems, namely the model following method, can be treated as a parallel model reference system. Hence, further research on M.R.A.C. systems will benefit all these important areas of automatic control.

It is with such a background that this research has been initiated. It does not attempt to invent entirely new design rules. Rather the main effort has been expanded on the clarification of the status of the art of designing model reference adaptive systems and on further development of some prospective design rules to simplify the implementation and to widen the scope of their application.

1.2. LITERATURE SURVEY

1.2.1. Adaptive Control

The M.R.A.C. system was first designed by the performance index minimization method proposed by Whitaker [1] of the M.I.T. Instrumentation Laboratory and has since then been referred as the M.I.T. design rule. The performance index is the integral squared of the response error. This rule has been very popular due to the simplicity in the practical implementation of the plant gain adjustment loop. For the adjustment of other parameters, however, sensitivity filters are required and the hardware involved may be prohibitive for simultaneous multi-parameter adjustments. An improved design rule with respect to the speed of response has then been proposed by Donalson [3] who used a more general performance index than that of Whitaker, but additional filters and the measurement of the state vectors are required. The

need of the sensitivity filters can be avoided by a gradient method developed later on by Dressler [4], or by an 'accelerated gradient method' suggested by Price [5]. The latter is easier to implement and is capable of achieving faster adaptations compared with other gradient techniques. Another contribution to the simplification of the design comes from the application of sensitivity analysis by Kokotovic et al [7,8] resulting in a design similar to the M.I.T. rule. Here, with further approximation, only one sensitivity filter is required for simultaneous multi-parameter adjustments. For some other particular applications, Winsor [27] has also modified the M.I.T. rule to reduce the sensitivity of the response to the loop gain, at the expense of additional instrumentation. All the design rules mentioned are not however, globally stable and hence the adaptive gain which governs the speed of response is limited. A good compromise between the stability and the speed of adaptation will have to be decided by laborious simulation studies. A recent contribution by Green [6] has extended the work of Dressler to form a 'stable maximum descent' method. However this adaptive rule is not attractive from a practical viewpoint because the first derivatives of the state vectors are often required to assure global stability of the resulting system.

Owing to the serious problem of instability encountered in the M.I.T. rule and other gradient techniques, two branches of research have become very active. These are the theoretical stability analysis using such tools as the second method of Liapunov, and the new synthesis approach which avoids the instability problem. The effort in the analysis of the parameter adjustment loops, for which differential equations are nonlinear and nonautonomous, are summarized by James [24] who shows that the current status of control theory can only cope with simple systems with deterministic signals and can hardly treat those with stochastic signals. Furthermore the procedure involved is very complex

and time consuming. On the other hand, in the Liapunov synthesis approach, the adaptive rule is obtained by selecting the design equations to satisfy conditions derived from the second method of Liapunov, so that the system stability is guaranteed for all inputs. Butchart and Shackcloth [9] have first suggested the use of a quadratic Liapunov function which was employed later on by Parks [2] to redesign systems formerly designed by the M.I.T. rule. The use of a different Liapunov function by Phillipson [11] and Gilbart et al [12] has resulted in the introduction of proportional (feedforward) loops which would improve the damping of the adaptive response.

The main disadvantage of the Liapunov method is that the entire state vector must be available for measurement, which is not often possible. Recent efforts in the application of the idea of positive real transfer function, notably that by Monopoli [13,14], have allowed one to eliminate or reduce the number of differentiators required to implement the design rule for adjusting both the plant gain and other parameters. Among other possible solutions to avoid the use of derivative networks, Currie and Stear [15] have envisaged the use of a Kalman filter, which would also handle the measurement noise problem, while the use of state observers [16] to estimate the states of an unknown time-varying plant is still an open question. Some recent contributions on adaptive state observers [17,18] represent the serious interest and the early stage of development in the use of observers in adaptive control. Another limitation of the Liapunov design rule is that it may not be applicable to cases where the plant parameters cannot be directly adjusted. Such a case was mentioned by Winsor and Roy [10] but a solution has been found recently by Monopoli [14]. A further possibility of indirectly controlling the plant by adjusting the feedforward and feedback gains has been investigated by Landau et al [58] and Narendra et al [50].

The Liapunov design can also be derived using the hyperstability theorems of Popov [56]. Landau has further shown that using the hyper-

stability approach, the analysis of nonideal systems is very simple. For instance the conditions for bounded-input bounded-output stability can be readily written down when noise or time-varying parameters are present. Although the hyperstability approach could give many other designs, so far the best found is still the same as the Liapunov design. Hence besides the convenience in analysis the hyperstable design rule is equivalent to the Liapunov design rule.

Other less well known but important designs deserve mentioning here. Nikiforuk and Rao [25] have suggested combining the advantages of the sensitivity and stability considerations and they produced an adaptive rule which could be made stable if the bound on the parameter variations is known. Choe and Nikiforuk [26] have suggested a feedback law which guarantees bounded-input bounded-output stability and uses only partial state measurements. Both of these approaches use the second method of Liapunov and represent alternative ways of designing on the basis of stability theory. Finally, the readers are referred to three recent survey papers [27-29] for other proposed designs.

1.2.2. Identification

Process parameter estimation using an adjustable model has been a popular on-line system identification technique [39,40]. This method seeks to adjust the parameters of the model continuously so as to null some error measure between the plant and the model. Two types of models have been widely used, one being the series-parallel model while the other is the parallel model [28]. The former yields an error measure called the equation error which is linear in the unknown parameters; the latter uses the response error as an error measure which is non-linear in the unknown parameters. Hence they are also called the equation error and response error methods respectively.

With the series-parallel model, many design rules can be used to adjust the model parameters. The most simple and popular design is called the Generalized Equation Error (G.E.E.) method [43] which seeks to minimize the square of error measure according to a steepest descent law. It uses a so called state variable filter technique [41] to avoid pure signal differentiations and is proved to be globally asymptotically stable. Recently the extension of this approach to treat multivariable systems has been done by Pazdera and Pottinger [49], Narendra and Kudva [50] who use the Liapunov synthesis design rules, and by Landau [61] who uses the hyperstability design rule. The only limitation of the G.E.E. method is that it gives biased estimates when the plant output is corrupted by noise.

The parallel model approach is in fact the usual parallel model reference adaptive system but with the adjustable model attempting to track the stationary (or slow-varying) plant. Hence all that has been said about the design methods in Section 1.2.1 may be applicable here. The status of the design rules is as follows. The sensitivity method [37,47] is most popular but uneconomical due to the large amount of time-varying sensitivity filters required; the stability may be assured in some designs [52]. The gradient method of Dressler [4], Hsia and Vimolvanich [38] does not require sensitivity filters but is limited to local convergence only. The gradient method employing stochastic approximation [52] is stable but the amount of hardware required for generating sensitivity functions is usually prohibitive and the rate of convergence is very slow. The synthesis approach of Parks [42] and Landau [51,63] is globally stable but its implementation requires the use of the plant state vector. All these methods, however, give unbiased parameter estimates when noise is present at the plant output.

An important difference between the series-parallel and the

parallel model approach is that the former only gives parameter estimates whereas the latter gives simultaneous parameter and state estimates [28]. This aspect has not been emphasized in the past primarily because the latter was dominated by the sensitivity design rule which was difficult to implement and because it was usually thought that the simultaneous parameter and state estimation could be adequately handled by more complex methods like the extended Kalman filter [54,55]. However it is now well known that the extended Kalman filter possesses a serious convergence problem and is also difficult to implement. The potential of the parallel model reference techniques is its simplicity in structure and fewer apriori information about noise statistics. The assured stability of the Liapunov and hyperstability designs will certainly add to the attractiveness of using model reference systems for simultaneous parameter and state estimations.

With explicit parameter and state estimations, many well known control techniques can then be applied to achieve adaptive control [44, 65-68]. Now there arises an important question as to when should M.R.A.C. (without explicit identification) be used and when should the adaptive control with on-line identification be used. Besides the usual consideration about the accessibility of adjustable parameters, the possibility of injecting test perturbations and the availability of state vectors, the most important factor influencing the choice of adaptive control technique is the question of whether or not the plant has dominant right-half-plane zeros (nonminimum phase) which vary with the operating condition. As the M.R.A.C. uses high gains in the adaptive loops, it may not be suitable for systems with nonminimum phase transfer function whereas the adaptive control employing explicit identification can cope with this type of system[68]. If the system to be controlled is minimum phase, then M.R.A.C. is preferable

as it avoids the usually difficult identification problems.

1.3. PURPOSE AND LAYOUT OF THE THESIS

The initial part of this research is a continuation of work done as an M.Sc. project in which a simulation study verified in some examples the superior performance of the Liapunov design over the M.I.T. rule. In this thesis, other gradient methods are included in the comparison and more general stochastic inputs are also used. Only continuous time linear models and plants are considered. The results confirm the earlier observation that the Liapunov design possesses excellent performance characteristics not attainable by other designs. Hence further developments of the Liapunov design rule will be worthwhile in order to extend the usefulness of model reference techniques. The latter part of the research thus includes the generalization of the usual Liapunov design algorithm for multivariable systems to treat a wider class of plants, the use of state variable filters for implementing the parallel model reference identification system, and a practical case study to assess the model reference systems designed by using stability theories. The layout of the thesis is as follows.

Chapter 2 describes the comparative studies of several design rules which include the M.I.T. rule, the Liapunov synthesis, the gradient rules of Dressler and Price, and the Monopoli design rule. Step, sinusoidal and stochastic inputs are used in the systematic performance comparison on the simulated examples. Dimensionless variables and performance criteria are used so that the results are most general. A qualitative analysis is then presented to discuss the relative performance when noise and disturbance are present.

Chapter 3 reviews the commonly used Liapunov design algorithm for the design of multivariable M.R.A.C. systems and points out its limitation when used in some actual applications. A new general algorithm is then derived and examined using the example of an adaptive speed control loop for a Ward-Leonard system. Qualitative discussions of two more examples are also given.

Chapter 4 begins with the discussion of using the Landau hyperstability design rule for on-line system identification problems. The possibility of using the state variable filters to avoid pure differentiation of signals when only the output of the plant but not the state vector is measurable is then investigated in detail. The feasibility of simultaneous parameter and state estimations is then explored. Finally, possible extensions to nonlinear systems and multidimensional systems are examined. Throughout this Chapter, various simulation results are presented to substantiate the theoretical developments and to demonstrate the typical performance of such designs.

Chapter 5 presents a case study in which the Landau design rule is assessed on a real physical system. The case is the on-line modelling of a third-order internal combustion engine by using an adjustable first-order linear model. The effects of neglecting the higher order modes and the inherent nonlinearity of the engine on the performance of this model reference identification system are examined. Finally a comparison is made with results obtained using the G.E.E. design method.

Chapter 6 summarises the findings and suggests pertinent topics for future undertakings.

In order to keep these chapters to the main flow of ideas, the various terminologies and theorems which are important but have

not been widely recognised are brought together in the next section. Hopefully this will ease the reading of this thesis.

1.4. DEFINITIONS AND THEOREMS

The reader is assumed to have fundamental knowledge on the second method of Liapunov. A good account of this method is the paper by Kalman and Bertram [32] while an example of its use in synthesis is demonstrated in appendix A.1. The various configurations of model reference systems have been discussed in reference 28 and hence only the series-parallel and parallel models are to be distinguished here. The concepts of absolute stability and hyperstability which have only been recently utilized for the synthesis of model reference adaptive systems [2,21] will be discussed.

Series-parallel and parallel models [28,29]. These can be best demonstrated via a single dimensional system as shown in Fig. 1.1. e_e is called the equation error and e_r is called the response error. A similar state space structure can be derived if the state vector is measured [49,50].

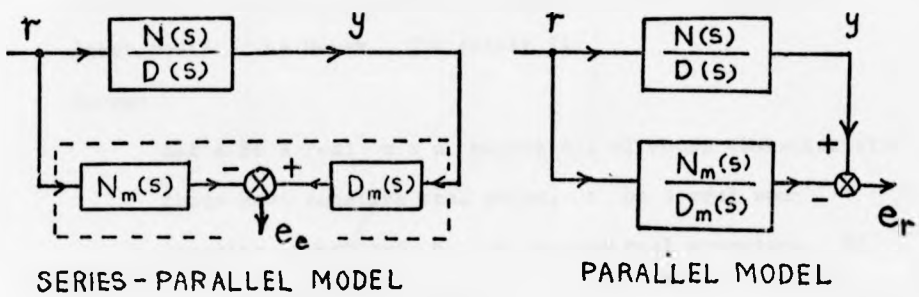

Fig. 1.1

Positive real function [56,58]. A rational transfer function $G(s)$ is termed "positive real" if the following conditions are satisfied:

(1) $G(s)$ has no poles in $\mathrm{Re}\,[s] > 0$ and poles on the $j\omega$ axis are simple with positive real residues;

(2) $\mathrm{Re}\, G(j\omega) \geqslant 0$ for all ω.

It is termed "strictly positive real" if in the above conditions, the sign $>$ is replaced by $\geqslant$ and vice versa.

Positive real matrix [57]. A rational transfer function matrix $Z(s)$ is termed positive real if:

(1) $Z(s)$ has real elements for real s;

(2) the elements of $Z(s)$ have no poles in $\mathrm{Re}\,[s] > 0$ and poles on the $j\omega$ axis are simple, and such that the associated residue matrix is non-negative definite Hermitian;

(3) $Z(j\omega) + Z^{T*}(j\omega) \geqslant 0$.

The signs T and $*$ denote transpose and complex conjugate respectively. Similarly a strictly positive real matrix can be defined.

Kalman-Meyer Lemma [13]. This lemma was first stated by Kalman in his treatment of the Lure problem on absolute stability and was later modified by Meyer. The result is:

Lemma:

Let A be a real $n \times n$ matrix all of whose characteristic roots have negative real parts, τ be a real non-negative number and $\underset{\sim}{b}$, $\underset{\sim}{k}$ be two real n-vectors. If

$$\tau + 2\,\underset{\sim}{k}^T (sI - A)^{-1}\,\underset{\sim}{b}$$

is a positive real function of s then there exist two $n \times n$ real symmetric matrices P, Q and a real n-vector

$\underset{\sim}{d}$ such that

a) $A^T P + P A = -\underset{\sim}{d}\,\underset{\sim}{d}^T - Q$;

b) $P \underset{\sim}{b} = \underset{\sim}{k} + \tau^{\frac{1}{2}} \underset{\sim}{d}$;

c) Q is positive semidefinite and P is positive definite.

For the purpose of using this lemma in the Liapunov design, one needs to put

$\tau = 0$;

$\underset{\sim}{d} = 0$ so that $P \underset{\sim}{b} = \underset{\sim}{k}$;

$\underset{\sim}{k}^T = [1, 0, \ldots, 0]$

so that $\underset{\sim}{k}^T [j\omega I - A]^{-1} \underset{\sim}{b} = \dfrac{N(j\omega)}{D(j\omega)}$

where $\dfrac{N(s)}{D(s)}$ is the transfer function of the plant.

<u>Hyperstability</u> [57]. This term was introduced by V.M. Popov to denote the stability property of a system consisting of a linear section and a nonlinear feedback section as shown in Fig. 1.2.

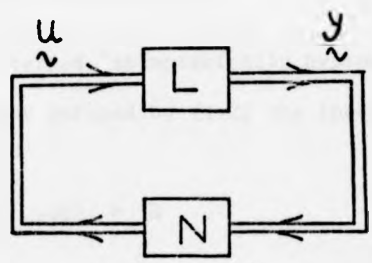

Fig. 1.2.

Consider the following state space description of the linear section,

$$\dot{\underset{\sim}{x}} = F \underset{\sim}{x} + G \underset{\sim}{u}$$
$$\underset{\sim}{y} = H \underset{\sim}{x} \tag{1.1}$$

where it is assumed that the pair $[F, G]$ is completely controllable and the pair $[F, H]$ is completely observable. The vectors $\underset{\sim}{u}$ and $\underset{\sim}{y}$ are also assumed to have the same dimension.

Hyperstability is a property of the system which requires the inputs $\underset{\sim}{u}$ to satisfy the following inequality:

$$\int_0^\tau \underset{\sim}{u}^T(t)\, \underset{\sim}{y}(t)\, dt \leq \delta \left[\|\chi(o)\| \right] \sup_{o \leq t \leq \tau} \|\chi(t)\| \tag{1.2}$$

Here δ is a positive constant depending on the initial state of the system but independent of the time τ. The inequality (1.2) hence defines the allowable class of nonlinearity.

The system (1.1) is termed "hyperstable" if for any $\underset{\sim}{u}$ in the subset defined by (1.2) the following inequality holds for some positive constant k and for all t:

$$\|\chi(t)\| \leq k(\|\chi(o)\| + \delta) \tag{1.3}$$

The system is termed "asymptotically hyperstable" if for any $\underset{\sim}{u}$ in the subset defined by (1.2) the inequality (1.3) holds together with

$$\lim_{t \to \infty} \chi(t) = 0$$

Now lets state the conditions required to be satisfied by the linear section of equation (1.1), the transfer function matrix of which is

$$Z(s) = H(sI - F)^{-1} G.$$

Theorem (Popov) [57]: A necessary and sufficient condition for the transfer function matrix $Z(s)$ of the system (1.1) to define a (asymptotically) hyperstable system is that $Z(s)$ be (strictly) positive real.

Eventual stability [20]. The origin of a system, which solution starts at time t_0 and state $\underset{\sim}{x}_0$, is said to be eventually stable if, given $\varepsilon > 0$ there exist numbers δ and T such that $\| \underset{\sim}{x}_0 \| < \delta$ implies that $\| \underset{\sim}{x} (t, t_0, x_0) \| < \varepsilon$ for all $t \geq t_0 \geq T$.

If in addition, there is an $r > 0$ and a T_0 such that $\| \underset{\sim}{x}_0 \| < r$ and $t_0 \geq T_0$ imply that $\underset{\sim}{x} (t, t_0, \underset{\sim}{x}_0) \to 0$ as $t \to \infty$, then the origin is said to be eventually asymptotically stable.

Theorem (Lasalle and Rath): Consider the following systems (1.4) and (1.5):

$$\dot{\underset{\sim}{x}} = F (\underset{\sim}{x}, t) \tag{1.4}$$

$$\dot{\underset{\sim}{x}} = F (\underset{\sim}{x}, t) + P (\underset{\sim}{x}, t) \tag{1.5}$$

If the system (1.4) has a uniformly asymptotically stable origin, then the system (1.5) will be eventually asymptotically stable if $| P_j (\underset{\sim}{x}, t) | \leq h_j(t)$ when $\| \underset{\sim}{x} \| \leq \gamma_0 (\gamma_0 > 0)$ where either:

$$h_j (t) \to 0 \quad \text{as} \quad t \to \infty$$

or: $$\int_0^\infty h_j (t)\, dt \quad \text{is finite.}$$

CHAPTER 2 - COMPARATIVE STUDIES OF MODEL REFERENCE ADAPTIVE CONTROL SYSTEMS

2.1. INTRODUCTION

The design of continuous model reference parameter adaptive control systems has received much attention by the control engineers in the past fifteen years. Consequently many ingenious design rules have been reported in the literature. As pointed out in the brief survey of Section 1.2. there are two main approaches in the synthesis of this class of M.R.A.C. systems. One is based on the minimization of a performance index [1,4,5] and the other on a Liapunov function [2]. Each of these approaches has its own merits and limitations, although many modifications have been suggested to improve them further. A direct contrast of the merits of these designs has been briefly mentioned in the literature [2,11] but a rigorous comparison especially that from a performance viewpoint has not been reported. Hence a comparative study of the various design rules will be of great interest to the designers who have long been faced with the difficulty of selecting a suitable one for certain applications.

In this chapter attention will initially be focussed on single-input single-output plant gain adjustment systems. Some of the more popular rules are critically analysed to point out their relative merits with regards to the stability, realization and adaptive response, which will also be supported by some simulation results. Subsequently a systematic performance comparison based on some well-known criteria is attempted through simulation studies. Deterministic as well as stochastic inputs are employed. Sensitivities of the performance to the input frequency bands are also examined. The interesting and useful performance characteristics are presented in the form of

similitudes [31].

The latter part of this chapter is concerned with the study of more general parameter adjustments. A qualitative analysis of the various designs is given and the general concern about noise and disturbance rejection is also examined.

The design rules to be compared are the M.I.T. rule [1], the Liapunov synthesis [2,12] and the rules suggested by Dressler [4], Price [5] and Monopoli [13]. The first two rules are by now well known while the latter three are less popular. The main reason for choosing the Dressler's and Price's rules is not merely because of their own merits but also because they can be viewed as a crude approximation to the Liapunov design rule with e_1 replacing the $\underset{\sim}{e}$ vector. Hence the effect of using e_1 instead of $\underset{\sim}{e}$ on the stability and response of the Liapunov design can be investigated. The inclusion of the Monopoli's rule here is natural as it is an improved version of the original Liapunov design with regards to the physical implementation. There are of course other important design rules such as those due to Kokotovic [8], Nikiforuk [25] and Choe [26]. However they are thought to be less general in applications and possess one or more of the following weaknesses:

(1) time-varying filters are required to generate the exact sensitivity functions;

(2) at most bounded-input, bounded-output stability can be ensured;

(3) adaptive gains required to assure convergence are proportional to the bound on parameter variations - hence in practice only useful for systems with small parameter variations;

(4) no integral action in the adaptive loop - hence greater sensitivity to noise, initial state and initial

parameter deviations; one such effect is to cause saturation during the transients;

(5) not truly parameter adaptive - hence not applicable to system identification problems.

Therefore these latter designs are not included to maintain a feasible size of the undertaking.

2.2. A CRITICAL COMPARISON OF THE DESIGN RULES

The following analysis is based on the aggregate of knowledge scattered in the literature. This information is reviewed here and studied by means of simulations. We shall first compare the M.I.T. rule [1] and the Liapunov synthesis [2,9-12] through the design of a gain adjustment loop of a linear system as shown in Fig. 2.1. Following this we shall examine design rules due to Dressler [4], Price [5] and Monopoli [13]. The block diagrams of these designs are shown in Fig. 2.2.

2.2.1. M.I.T. Rule and Liapunov Synthesis

The notation used below is that shown in Fig. 2.1 and Fig. 2.2. The performance index used in the M.I.T. rule [1] is $\int e_1^2 \, dt$ and the parameter adjustment law using a steepest descent minimization technique is

$$\dot{K}_c = Be_1 \frac{\partial \Theta_p}{\partial K_c} \tag{2.1}$$

In this case the sensitivity function $\frac{\partial \Theta_p}{\partial K_c}$ is proportional to Θ_m and hence the above equation becomes

$$\dot{K}_c = B'e_1\Theta_m \tag{2.2}$$

where the constant B' is the adaptive gain.

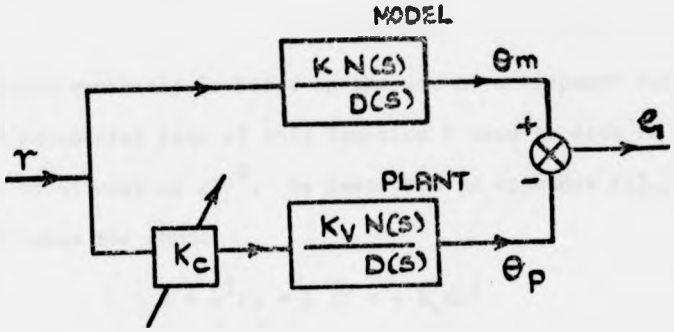

Fig. 2.1 A basic M.R.A.C. gain adjustment system

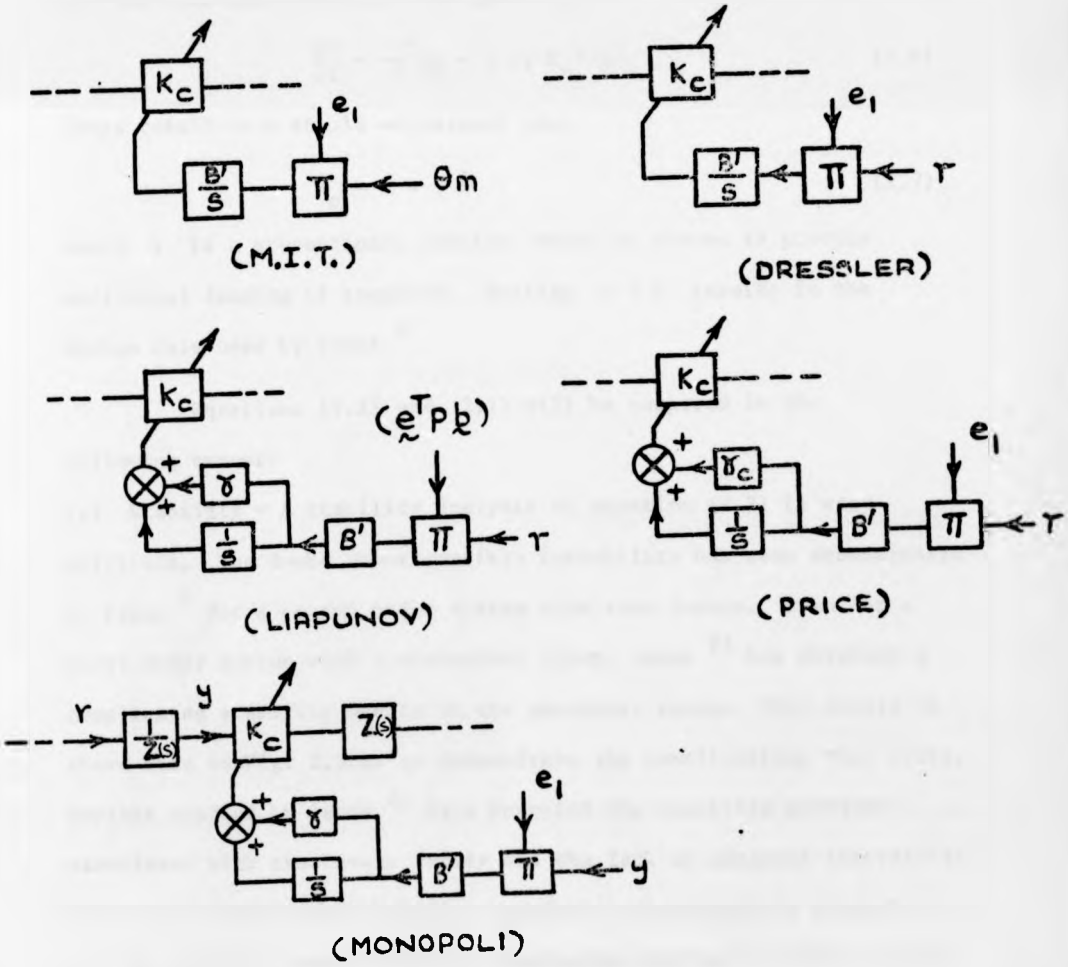

Fig. 2.2 Various designs of the adaptive loop

The Liapunov synthesis is based on the use of a Liapunov function. The most successful form of this function V used to date is that proposed by Gilbart et al [9]. As described in appendix A.1., the function takes the form:

$$V = \underset{\sim}{e}^T P \underset{\sim}{e} + \lambda \, (X + \gamma \, K_v m)^2 \tag{2.3}$$

where

$$m = B' \underset{\sim}{e}^T P b r \tag{2.4}$$

$$X = K - K_c K_v \tag{2.5}$$

and the time derivative of V is given by

$$\frac{dV}{dt} = -\underset{\sim}{e}^T Q \underset{\sim}{e} - 2 \, \lambda\gamma \, K_v{}^2 \, m^2 \tag{2.6}$$

These result in a stable adjustment law:

$$\dot{K}_c = m + \gamma \, \dot{m} \tag{2.7}$$

where γ is a proportional constant which is chosen to provide additional damping if required. Putting $\gamma = 0$ results in the design rule used by Parks [2].

Equations (2.2) and (2.7) will be compared in the following manner:

(a) Stability - A stability analysis of equation (2.2) is very difficult. The doubt about possible instability has been demonstrated by Parks [2] for a second order system with step inputs. Even for a first order system with a sinusoidal input, James [23] has obtained a complicated stability domain in the parameter space. This domain is shown here in Fig. 2.3(a) to demonstrate the complications that arise. Further studies by James [24] have revealed the stability problems associated with stochastic inputs and the lack of adequate theoretical methods to predict the stability boundary. An example is shown here in Fig. 2.3(b). Hence extensive simulations during the design stage are necessary to establish the region of stable operations. On the other

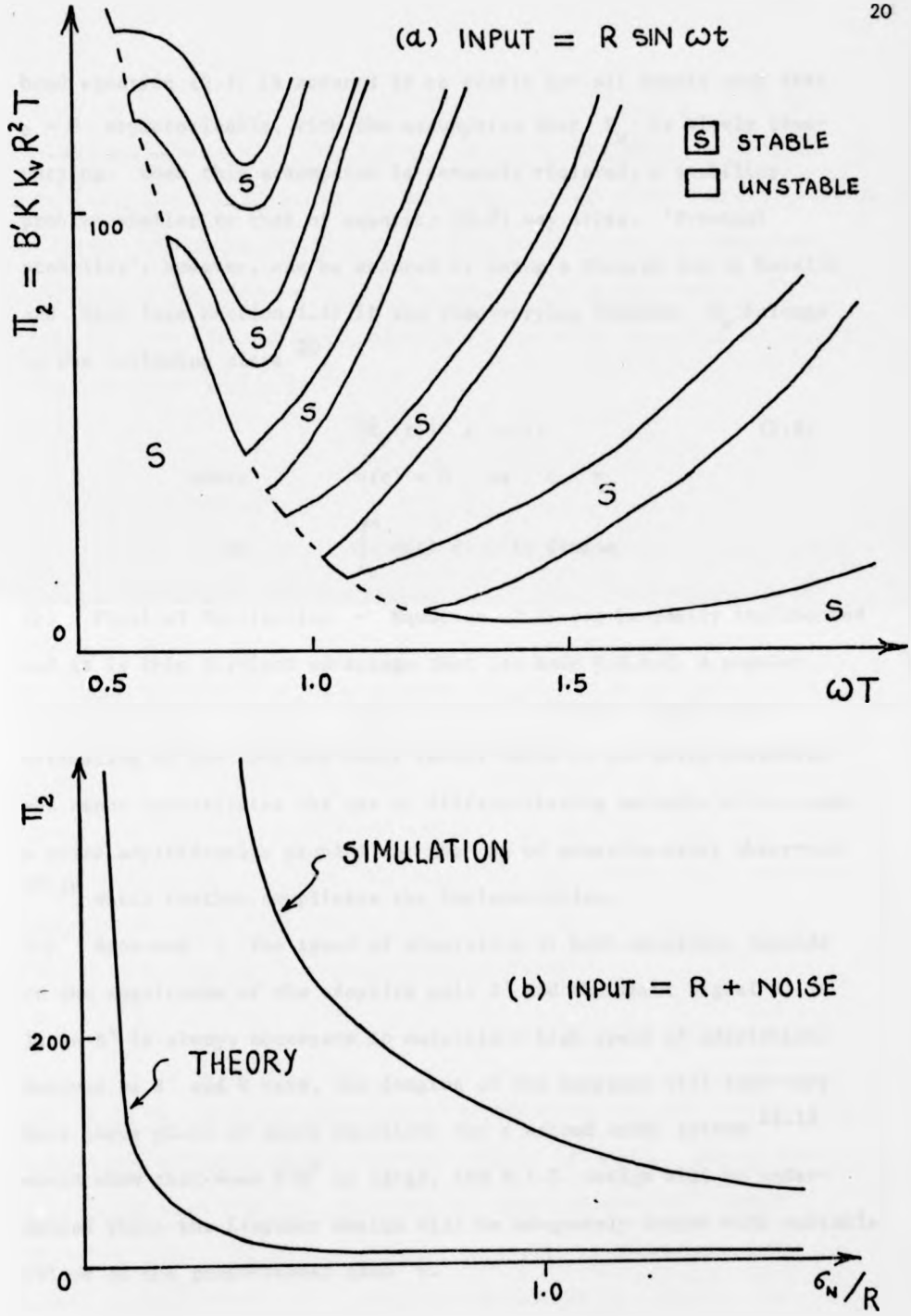

Fig. 2.3 Stability regions of M.I.T. DESIGNS

(after James [23,24])

hand equation (2.7) is assured to be stable for all inputs such that $\underset{\sim}{e} \to 0$ asymptotically, with the assumption that K_v is slowly time-varying. When this assumption is severely violated, a stability problem similar to that of equation (2.2) may arise. 'Eventual stability', however, can be assured by using a theorem due to Lasalle and Rath (see Section 1.4) if the time-varying function K_v belongs to the following class [20]:

$$|\dot{K}_v(t)| \leq \eta(t) \tag{2.8}$$

where $\eta(t) \to 0$ as $t \to \infty$

or $\int_0^\infty \eta(t)\, dt$ is finite.

(b) Physical Realization - Equation (2.2) can be easily implemented and it is this distinct advantage that has made M.R.A.C. a popular adaptive control strategy. Equation (2.7) however, requires the estimation of the complete state vector which is not often available and hence necessitates the use of differentiating networks which cause a noise amplification problem, or the use of adaptive state observers [17,18] which further complicate the implementation.

(c) Response - The speed of adaptation of both equations depends on the magnitudes of the adaptive gain B' and the input signal R. A large B' is always necessary to maintain a high speed of adaptation. However as B' and R vary, the damping of the response will also vary. Root locus plots of these equations for a second order system [11,12] would show that when $B'R^2$ is large, the M.I.T. design will be under-damped while the Liapunov design will be adequately damped with suitable values of the proportional gain γ.

2.2.2. Other Design Rules

We shall next examine the following rules.

Dressler [4] ---- The parameter adjustment law is

hand equation (2.7) is assured to be stable for all inputs such that $\underset{\sim}{e} \to 0$ asymptotically, with the assumption that K_v is slowly time-varying. When this assumption is severely violated, a stability problem similar to that of equation (2.2) may arise. 'Eventual stability', however, can be assured by using a theorem due to Lasalle and Rath (see Section 1.4) if the time-varying function K_v belongs to the following class [20]:

$$|\dot{K}_v(t)| \leq \eta(t) \tag{2.8}$$

where $\eta(t) \to 0$ as $t \to \infty$

or $\int_0^\infty \eta(t)\, dt$ is finite.

(b) Physical Realization - Equation (2.2) can be easily implemented and it is this distinct advantage that has made M.R.A.C. a popular adaptive control strategy. Equation (2.7) however, requires the estimation of the complete state vector which is not often available and hence necessitates the use of differentiating networks which cause a noise amplification problem, or the use of adaptive state observers [17,18] which further complicate the implementation.

(c) Response - The speed of adaptation of both equations depends on the magnitudes of the adaptive gain B' and the input signal R. A large B' is always necessary to maintain a high speed of adaptation. However as B' and R vary, the damping of the response will also vary. Root locus plots of these equations for a second order system [11,12] would show that when $B'R^2$ is large, the M.I.T. design will be under-damped while the Liapunov design will be adequately damped with suitable values of the proportional gain γ.

2.2.2. Other Design Rules

We shall next examine the following rules.

Dressler [4] ---- The parameter adjustment law is

$$\dot{K}_c = B'e_1 r \tag{2.9}$$

The resulting controller is very simple and no sensitivity filter is required. The disadvantages are that the damping of the response suffers at larger loop gains and that the global stability is not guaranteed. Its stability problem is similar to that of the M.I.T. rule.

Price [5] ---- The parameter adjustment law which is called the accelerated gradient method is

$$\dot{K}_c = B'e_1 r + \gamma_c \frac{d}{dt}(B'e_1 r) \tag{2.10}$$

where γ_c is a constant.

The controller is similar to that of Dressler except for the addition of the proportional (feedforward) term. This term has the effect of improving the damping and the stability of the response. This stabilising effect would however be impaired as the order of the system increases, and generally the global stability cannot be guaranteed.

Monopoli [13] ---- This is based on a modification of the Liapunov scheme. A differentiating block $(Z(s))$ is used to modify the plant transfer function such that $Z(s)N(s)/D(s)$ is positive real, and the Kalman-Meyer Lemma (see Section 1.4) is used to eliminate the error derivatives required in equation (2.7). Hence

$$\dot{K}_c = B'e_1 y + \gamma \frac{d}{dt}(B'e_1 y) \tag{2.11}$$

where y is the modified input signal to the plant and obtained by passing the original signal through a filter $(1/Z(s))$. For an n-th order plant with m zeros, the order of $Z(s)$ is $(n-m-1)$. Global asymptotic stability of the adaptive loop will be guaranteed while the number of derivatives required is reduced to $(n-m-1)$, or $(n-m-2)$ if the extra damping loop is not in use. The latter is achieved by decomposing $Z(s)$ into $Z'(s)(s + \alpha)$. Now since $\dot{K}_c$ is available, $(s + \alpha)K_c y$ can be implemented without pure differentiation as it can

be synthesized by summing $K_c \frac{1}{Z'(s)} r$ and $\dot{K}_c y$.
This technique can be easily extended to the case of a general time-varying gain.

2.2.3. A Simulation Study of the Adaptive Response

At this point one would wonder whether or not the stability issue should have an important weight at all on assessing a design rule. For instance if the M.I.T. design, subject to a stability analysis or simulation which defines the domain of stable operations, would in this stable domain exhibit a faster speed of adaptation than the Liapunov design, then the former would be regarded as practically adequate and the emphasis on achieving global stability should be lessened. If the reverse is true then the requirement for the design to guarantee global stability will be more acceptable and useful to the system designers. Such an issue, which has so far been neglected in the literature, will be investigated here.

A simple simulation study of the adaptive response of the various designs has been conducted. The adaptive response is defined in this context as the time response of the parameter adjustment when there is a step change in the parameter. The study has indeed shown that very often the Liapunov designs could achieve excellent performance not attainable by other rules. As an example consider a second order plant whose gain is to be adjusted. Referring to Fig. 2.1 and 2.2, the following values are assumed:

$$\frac{N(s)}{D(s)} = \frac{1}{1+a_1 s+a_2 s^2}, \quad a_1 = 2, \quad a_2 = 1, \quad K = 1,$$

$$K_v = 2, \quad K_c(t_0) = 0.2.$$

From appendix A.1, we obtain $\underset{\sim}{e}^T P \underset{\sim}{b} = e_1 + \dot{e}_1$. We shall choose

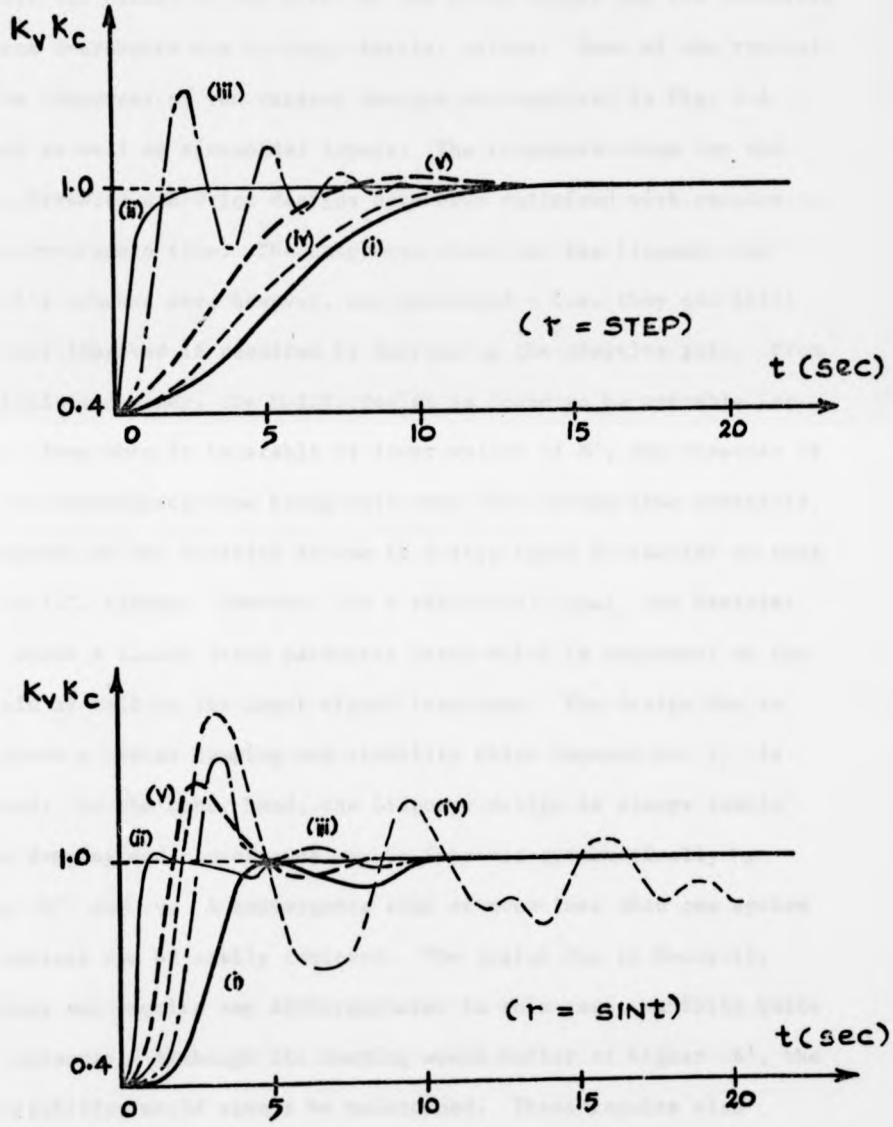

Fig. 2.4 Responses of the second order systems

(i) M.I.T.; (ii) Liapunov;

(iii) Monopoli; (iv) Dressler;

(v) Price (γ_c = 0.5).

$Z(s) = 2s + 2$ (as in Ref. 13) and shall limit the values of γ and γ_c to, say, 50% because in actual use they may have to be quite small to reduce the effect of any noise at the plant output and the excessive transient overshoots due to large initial errors. Some of the typical adaptive responses of the various designs are depicted in Fig. 2.4 for step as well as sinusoidal inputs. The responses shown for the M.I.T., Dressler and Price designs have been optimized with respect to the convergence time. The responses shown for the Liapunov and Monopoli's schemes are, however, not optimized - i.e. they can still be further improved if required by increasing the adaptive gain. From this simulation study, the M.I.T. design is found to be unstable for $B' > 1$. Even when it is stable at lower values of B', the response is slow, the convergence time being well over five system time constants. The response of the Dressler scheme to a step input is similar to that of the M.I.T. scheme. However, for a sinusoidal input, the Dressler scheme shows a steady state parameter error which is dependent on the loop gain as well as the input signal frequency. The design due to Price shows a better damping and stability which improve as γ_c is increased. On the other hand, the Liapunov design is always stable and the damping and convergence can be improved systematically by varying B' and γ. A convergence time of even less than one system time constant can be easily achieved. The design due to Monopoli, which does not require any differentiator in this case, exhibits quite a fast response. Although its damping would suffer at higher B', the system stability would always be maintained. These results also substantiate the foregoing theoretical analysis.

2.3. A SYSTEMATIC PERFORMANCE COMPARISON

The importance of a performance comparison has been discussed

in Section 2.2.3. The example given also indicates the complexity and scale involved in any attempt to make a complete comparative study. A systematic approach is therefore taken in this section.

Some commonly used performance criteria [30] which include the settling time (T_s), the integral of squared error (ISE), the integral of time absolute error (ITAE), and the integral of time squared error (ITSE) will be employed to compare the responses of the various designs against their system parameters. This will be studied experimentally through computer simulations of two gain adjustment schemes. The results will be presented in the form of similitudes by applying a dimensional analysis [31] to the system differential equations such that the quantities to be investigated are expressed in dimensionless groups. The dimensionless performance criterion is denoted by π_1 and the dimensionless system parameter is denoted by π_2. The performance characteristics are defined in this connection as the plots of π_1 against π_2.

2.3.1. First Order Systems $\left(\frac{N(s)}{D(s)} = \frac{1}{1+sT} \right)$

In this case, the designs due to Dressler and Price are identical to the Liapunov schemes. Also, the latter does not require any differentiators. Hence we only need to compare the M.I.T. and the Liapunov designs. Their system equations are listed in appendix A.2.

Deterministic inputs ---- Step and sinusoidal inputs are employed. From the dimensional analysis shown in appendix A.3. the following are defined:

$$\pi_2 = KK_vB'R^2T \qquad \text{(M.I.T. design)}$$

$$= K_vB'R^2T \qquad \text{(Liapunov design)}$$

$$\pi_1 = T_s/T \qquad (5\%\ T_s \text{ criterion})$$

$$= \frac{1}{K^2R^2T}\int e_1{}^2dt \qquad (\text{ISE criterion})$$

$$= \frac{1}{KRT^2}\int t|e_1|dt \qquad (\text{ITAE criterion})$$

$$= \frac{1}{K^2R^2T^2}\int te_1{}^2dt \qquad (\text{ITSE criterion})$$

The parameters which cannot be grouped into the above are fixed at: frequency of sinusoidal input = 2.5 c/s, $K_c\ (t_0) = 0$, $\gamma = 0$ and 0.1.

The performance characteristics obtained are shown in Fig. 2.5 and 2.6. For step inputs, in which case the M.I.T. design is always stable, the T_s criterion shows a region where this design is unfavourable since π_1 may increase or decrease with an increment in π_2, whereas the same type of uncertainty does not appear in the Liapunov design with $\gamma = 0.1$. For sinusoidal inputs, all the four characteristics for the M.I.T. design possess regions of uncertainty over a wide range of π_2. Furthermore it has already been ensured that within the parameter ranges tested, that is $\pi_2 \leq 25$, this design is operated below the boundary of conditional stability as pointed out by James (Fig. 2.3 (a)). These findings suggest that an extensive simulation study would be necessary in order to determine a safe and economic value of π_2 to achieve any specific π_1 even though the system is operated in the stable region. On the other hand, the similitudes for the Liapunov designs show a monotonic decrease of π_1 with increasing π_2. This is a desirable feature. In addition this design can achieve values of π_1 not attainable by the M.I.T. design. Examinations of the effect of changing the input signal frequency have also been conducted. The results which are too long to show here, indicate that in the M.I.T. scheme the system performance is very sensitive to the change in frequency whereas in the Liapunov scheme

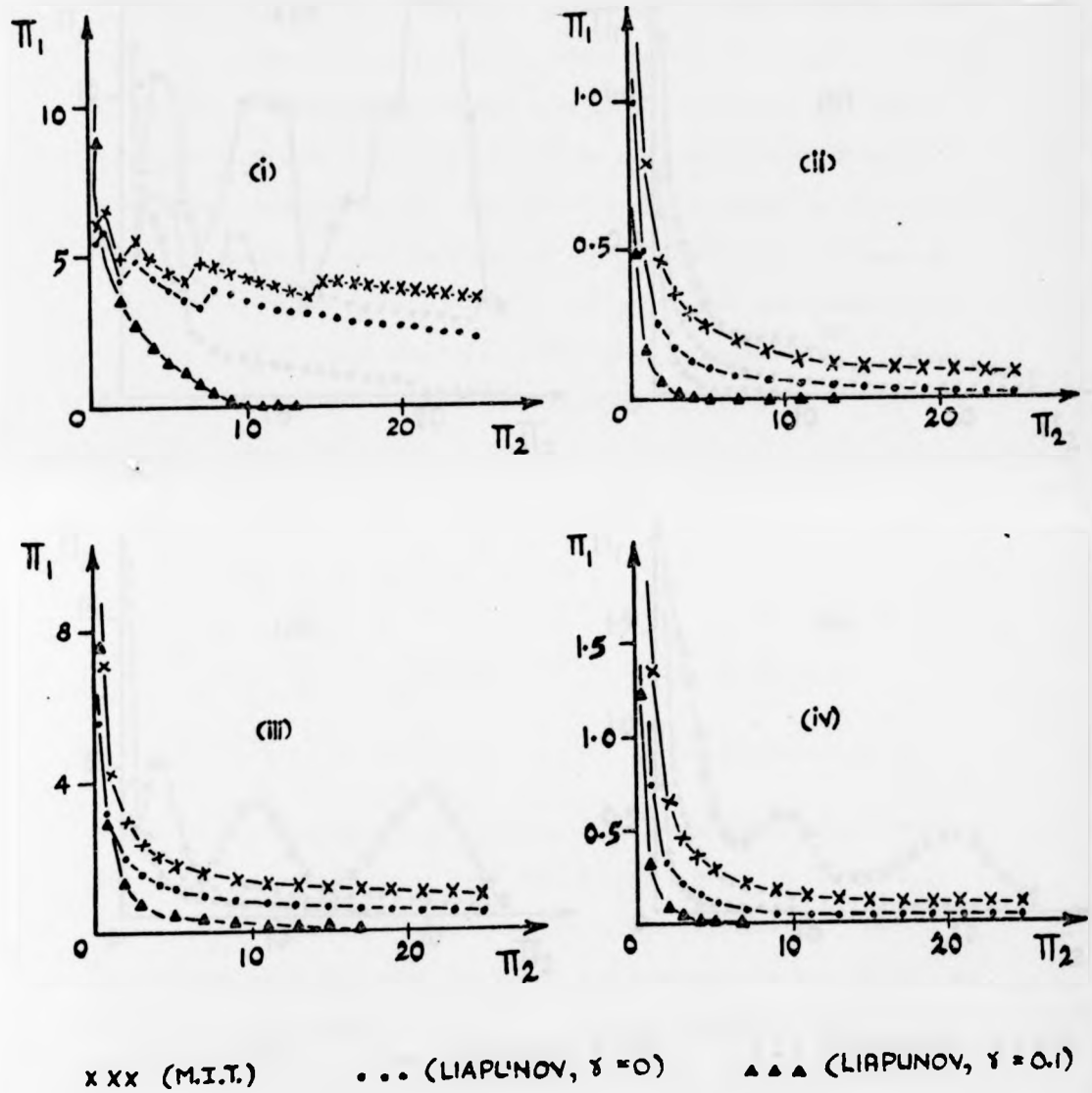

Fig. 2.5 Performance characteristics of first order systems with step inputs.

Criteria : (i) T_s; (ii) ISE; (iii) ITAE; (iv) ITSE.

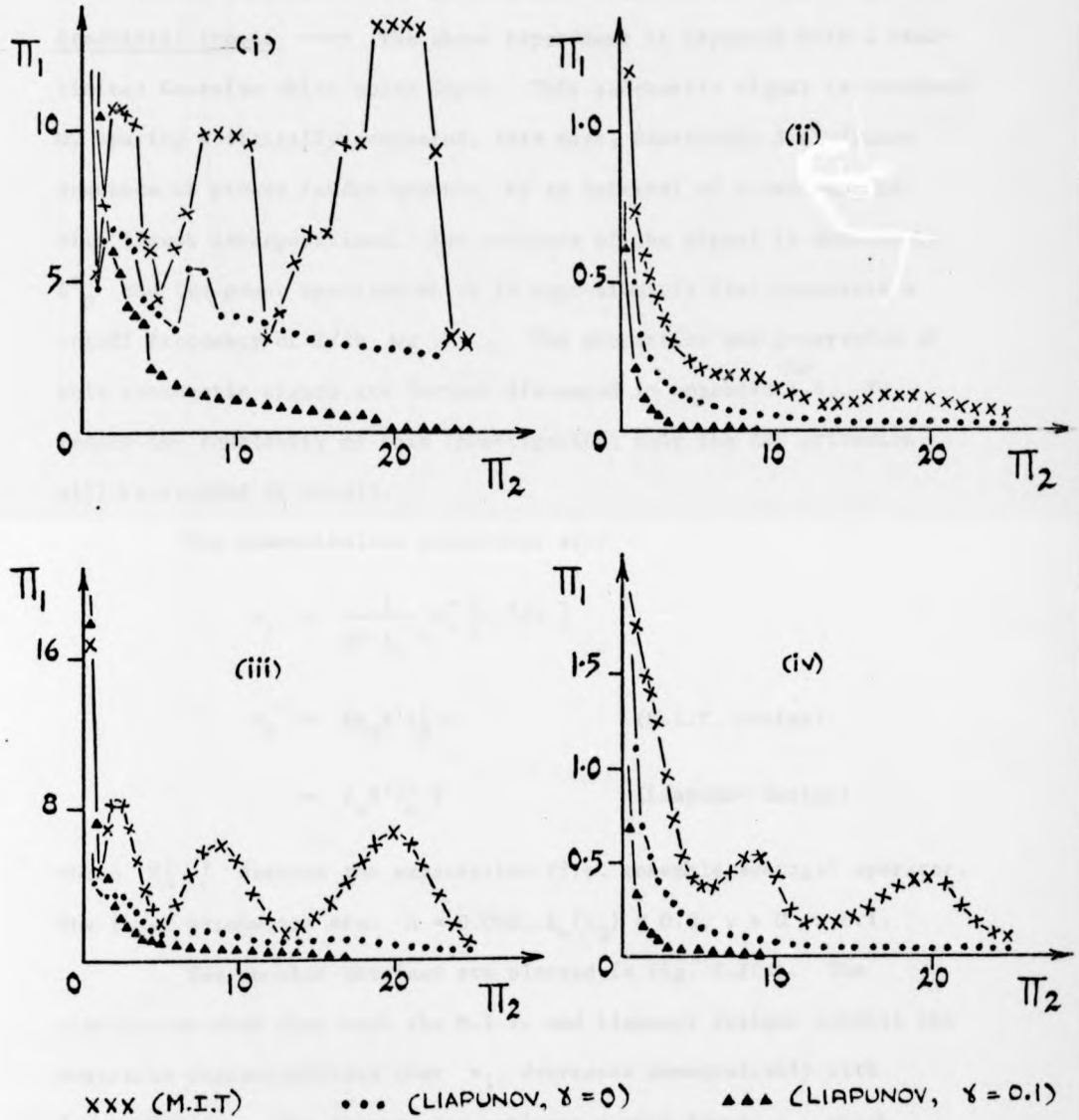

Fig. 2.6 Performance characteristics of first order systems with sinusoidal inputs.

Criteria : (i) T_s; (ii) ISE; (iii) ITAE; (iv) ITSE.

it is almost insensitive to the frequency especially at higher gains.

Stochastic inputs ---- The above experiment is repeated with a band-limited Gaussian white noise input. This stochastic signal is obtained by spacing a digitally generated, zero mean, Gaussianly distributed sequence of pseudo random numbers, by an interval of h seconds and with linear interpolations. The variance of the signal is denoted by δ^2_N and its power spectrum which is approximately flat possesses a cutoff frequency of 1/2h Hz. The properties and generation of this stochastic signal are further discussed in appendix A.4. To reduce the complexity of this investigation, only the ISE criterion will be studied in detail.

The dimensionless quantities are:

$$\pi_1 = \frac{1}{K^2 \delta_N^2 T} E\left[\int e_1{}^2 dt \right]$$

$$\pi_2 = KK_v B' \delta_N^2 T \qquad \text{(M.I.T. design)}$$

$$= K_v B' \delta_N^2 T \qquad \text{(Liapunov design)}$$

where $E[\ ]$ denotes the expectation (i.e. ensemble average) operator. The fixed parameters are: $h = 0.002$, $K_c(t_0) = 0.0$, $\gamma = 0$ or 0.1.

The results obtained are plotted in Fig. 2.7(a). The similitudes show that both the M.I.T. and Liapunov designs exhibit the desirable characteristics that π_1 decreases monotonically with increasing π_2. The latter also achieves a much lower π_1 which cannot be reached by the former. Another important property that has been noted is that the variances about the expected values are different in each case. From the plot shown in Fig. 2.7(b), one observes that the variances in the M.I.T. design are very much larger than those in the Liapunov scheme. This indicates that in the former scheme there may exist a considerable degree of uncertainty about its performance. This

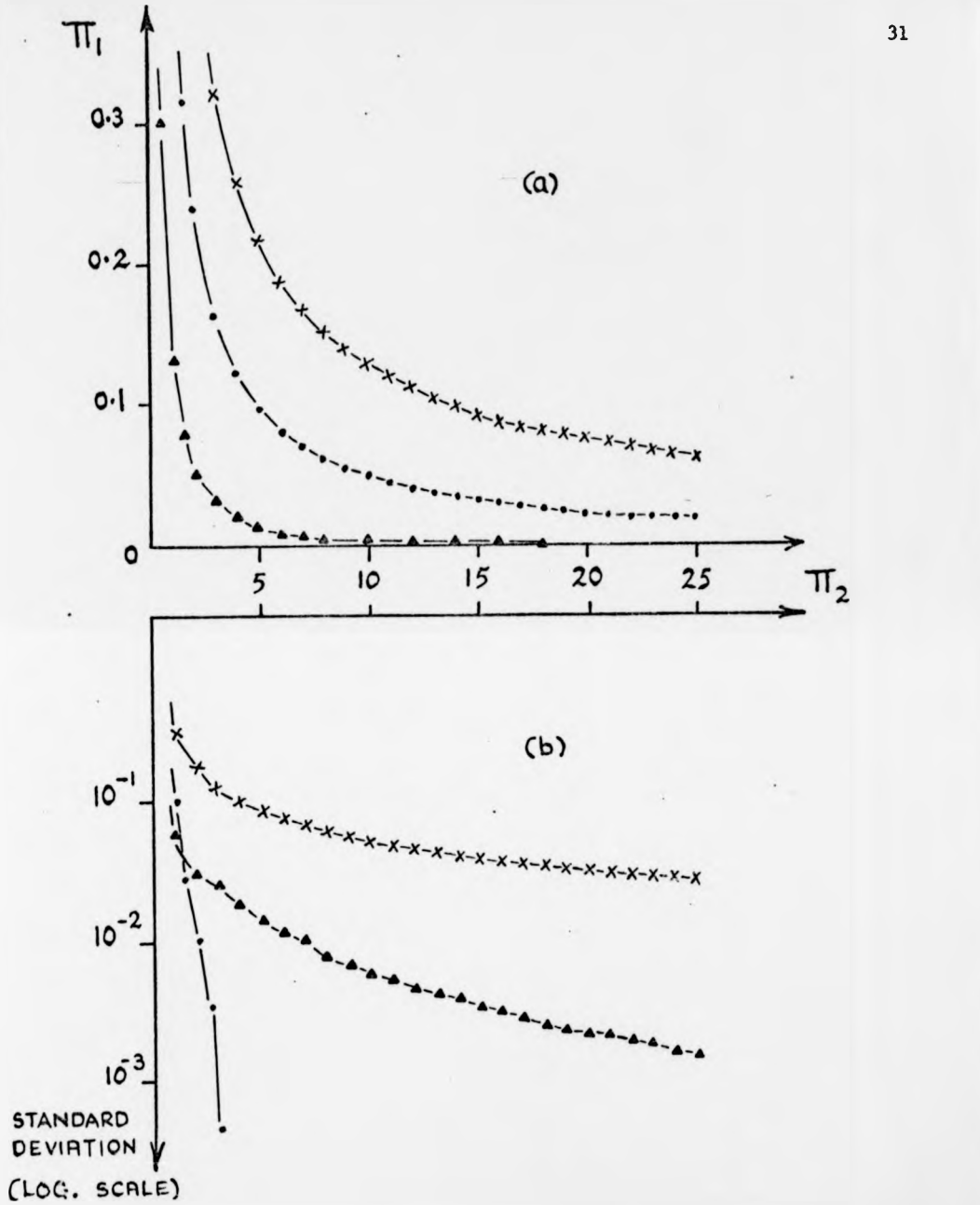

Fig. 2.7 Performance characteristics of first order systems with stochastic inputs.

Criterion : ISE.

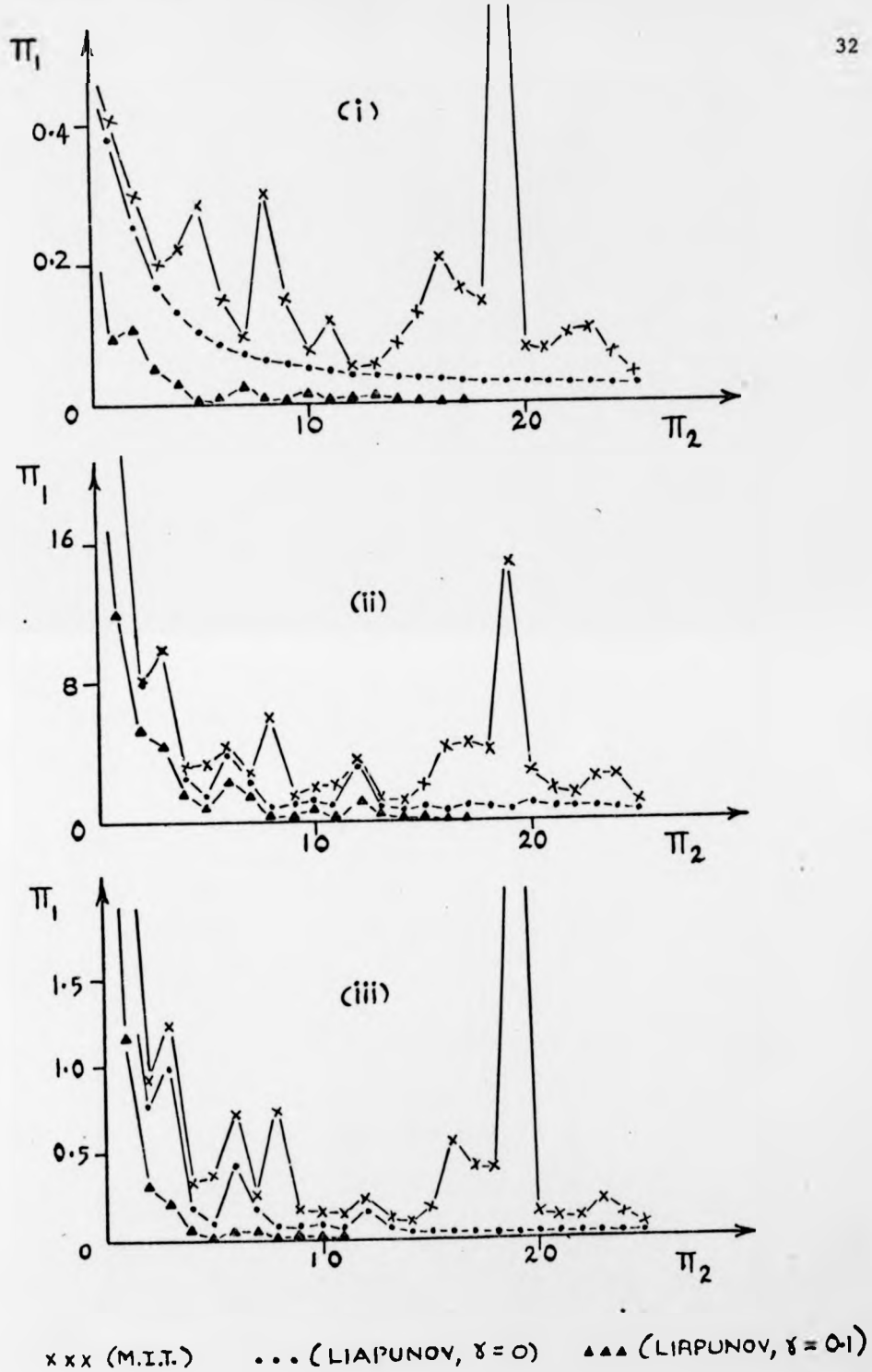

Fig. 2.8 A sample of the characteristics
Criteria : (i) ISE; (ii) ITAE; (iv) ITSE.

is confirmed by studying the ensemble members of the random process. One of these is shown here in Fig. 2.8. Also shown are ensembles of the corresponding results using the other two integral criteria. These similitudes reveal that the M.I.T. scheme possesses the undesirable property that π_1 may increase or decrease with increasing π_2 while that in the Liapunov scheme shows an almost monotonic decrease.

In addition to the case just reported, other experiments have been carried out. The finding is that when the power spectrum of the input signal (proportional to 1/h) is reduced, the performance of the M.I.T. design would deteriorate whereas that of the Liapunov design would improve.

2.3.2. Second Order Systems $\left(\frac{N(s)}{D(s)} = \frac{1}{1+a_1 s+a_2 s^2} \right)$

The five designs described in Section 2.2. will be examined here. The system differential equations are as listed in appendix A.2. It is noted that while the Liapunov design requires one differentiator, that due to Monopoli does not need any.

Deterministic inputs ---- From the dimensional analysis shown in appendix A.3. the following are defined:

$$\pi_2 = KK_v B'R^2 a_1 \qquad \text{(M.I.T. design)}$$

$$= K_v B'R^2 a_1 \qquad \text{(others)}$$

$$\pi_1 = T_s/a_1 \qquad \text{(2\% } T_s \text{ criterion)}$$

$$= \frac{1}{K^2R^2a_1} \int e_1{}^2 dt \qquad \text{(ISE criterion)}$$

$$= \frac{1}{KRa_1^2} \int t|e_1|dt \qquad \text{(ITAE criterion)}$$

$$= \frac{1}{K^2R^2a_1^2} \int te_1{}^2dt \qquad \text{(ITSE criterion)}$$

Other fixed parameters are: $a_2/a_1^2 = \frac{1}{4}$, $K_c(t_o) = 0.2$, $\gamma_c = 0.5$, $\gamma = 0$ and 0.1, frequency of sinusoidal input = 0.16 c/s.

The performance characteristics obtained are shown in Fig. 2.9 and 2.10. With step inputs, the M.I.T. and Dressler designs possess a minimum in π_1 as π_2 varies; for π_2 smaller or larger than this minimum value, π_1 increases sharply. Other designs show a monotonic reduction, especially at higher values of π_2. With sine inputs, both the M.I.T. and Dressler designs are again found to possess a minimum in π_1, and the latter is more critical than the former. The design by Price shows an unfavourable performance in that the uncertainty as discussed in the first order systems occurs. The Liapunov and the Monopoli designs, however, still maintain the desirable performance characteristics similar to that with step inputs.

The performance of these designs with different frequencies of the sinusoidal input signal has also been examined. The same range of π_2 is used. The general observation is that the Liapunov and Monopoli designs are less sensitive to the signal frequency with regards to both the stability and the convergence rate. The M.I.T. system always possesses a minimum π_1 at some value of π_2 which increases with the frequency; at lower frequencies, more than one minimum point may be observed. The convergence rate decreases with increasing frequencies. The Dressler system is unstable at higher frequencies; at lower frequencies the system is stable for a small range of π_2 but this range may increase or decrease with decreasing frequencies. The design by Price improves at lower frequencies, in that the fluctuation in π_1 reduces, but deteriorates rapidly at frequencies higher than the resonant frequency of the plant and eventually becomes unstable.

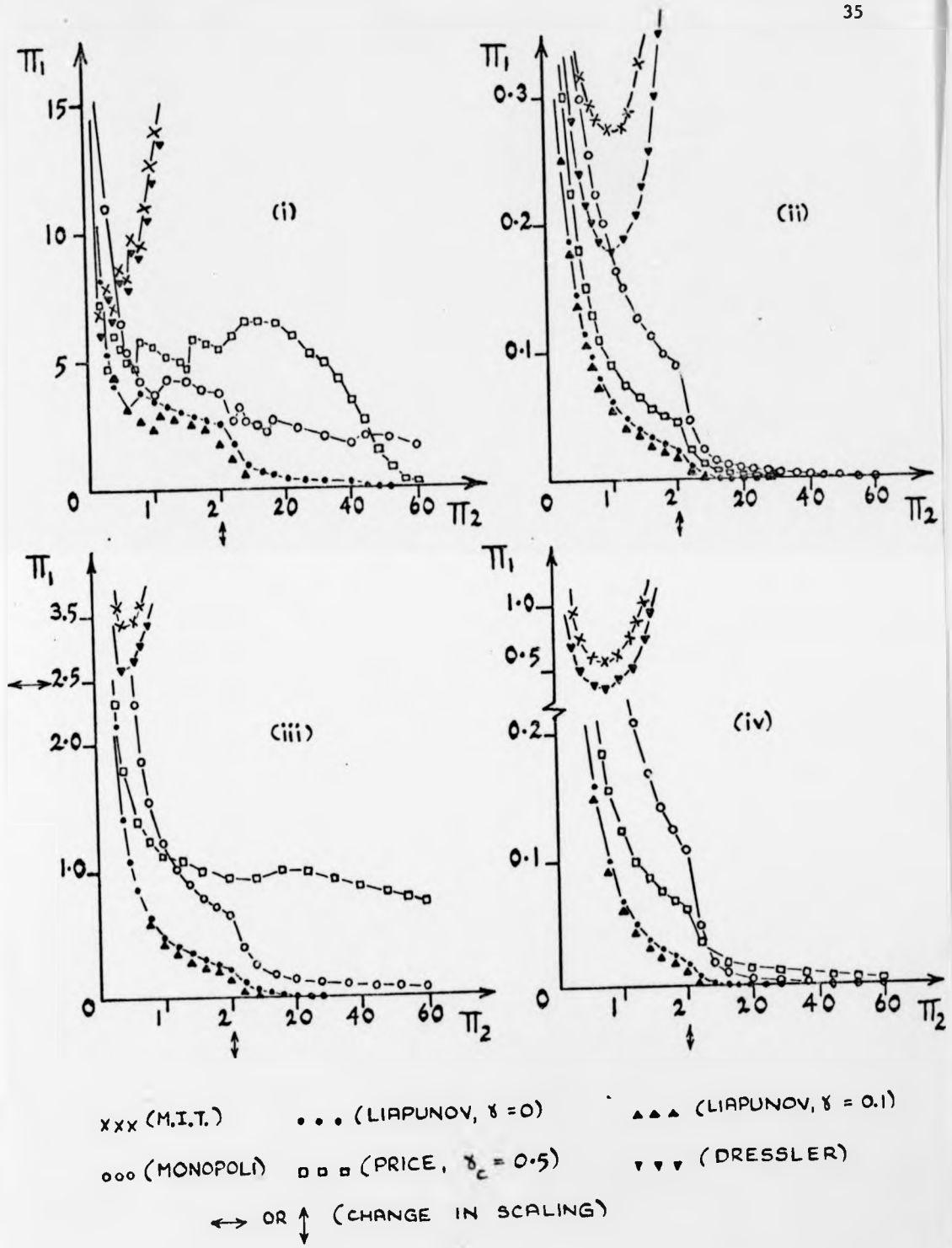

xxx (M.I.T.) • • • (LIAPUNOV, $\gamma = 0$) ▲▲▲ (LIAPUNOV, $\gamma = 0.1$)

ooo (MONOPOLI) □ □ □ (PRICE, $\gamma_c = 0.5$) ▼▼▼ (DRESSLER)

↔ OR ↕ (CHANGE IN SCALING)

Fig. 2.9 Performance characteristics of second order systems with step inputs.

Criteria : (i) T_s; (ii) ISE; (iii) ITAE; (iv) ITSE.

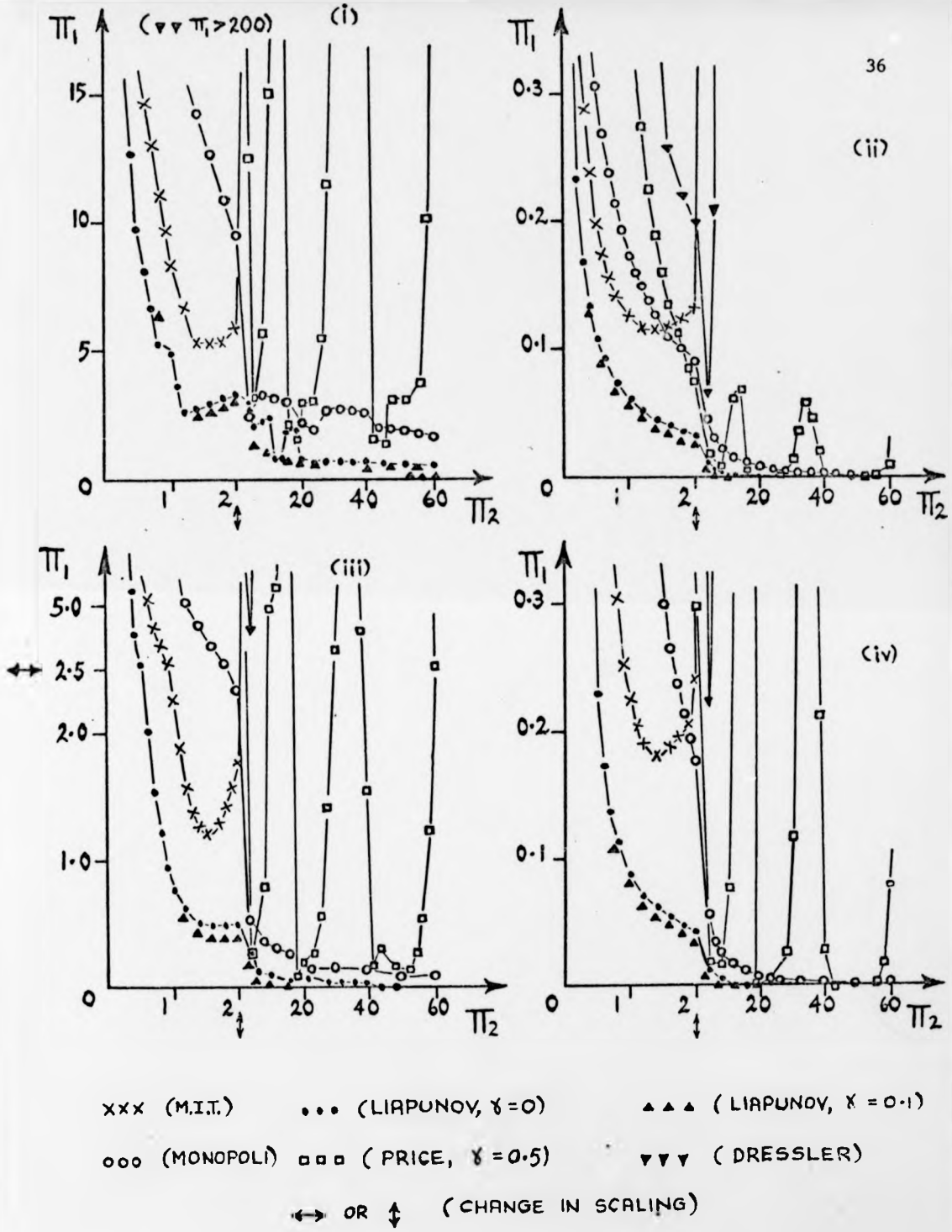

Fig. 2.10 Performance characteristics of second order systems with sinusoidal inputs.

Criteria : (i) T_s; (ii) ISE; (iii) ITAE; (iv) ITSE.

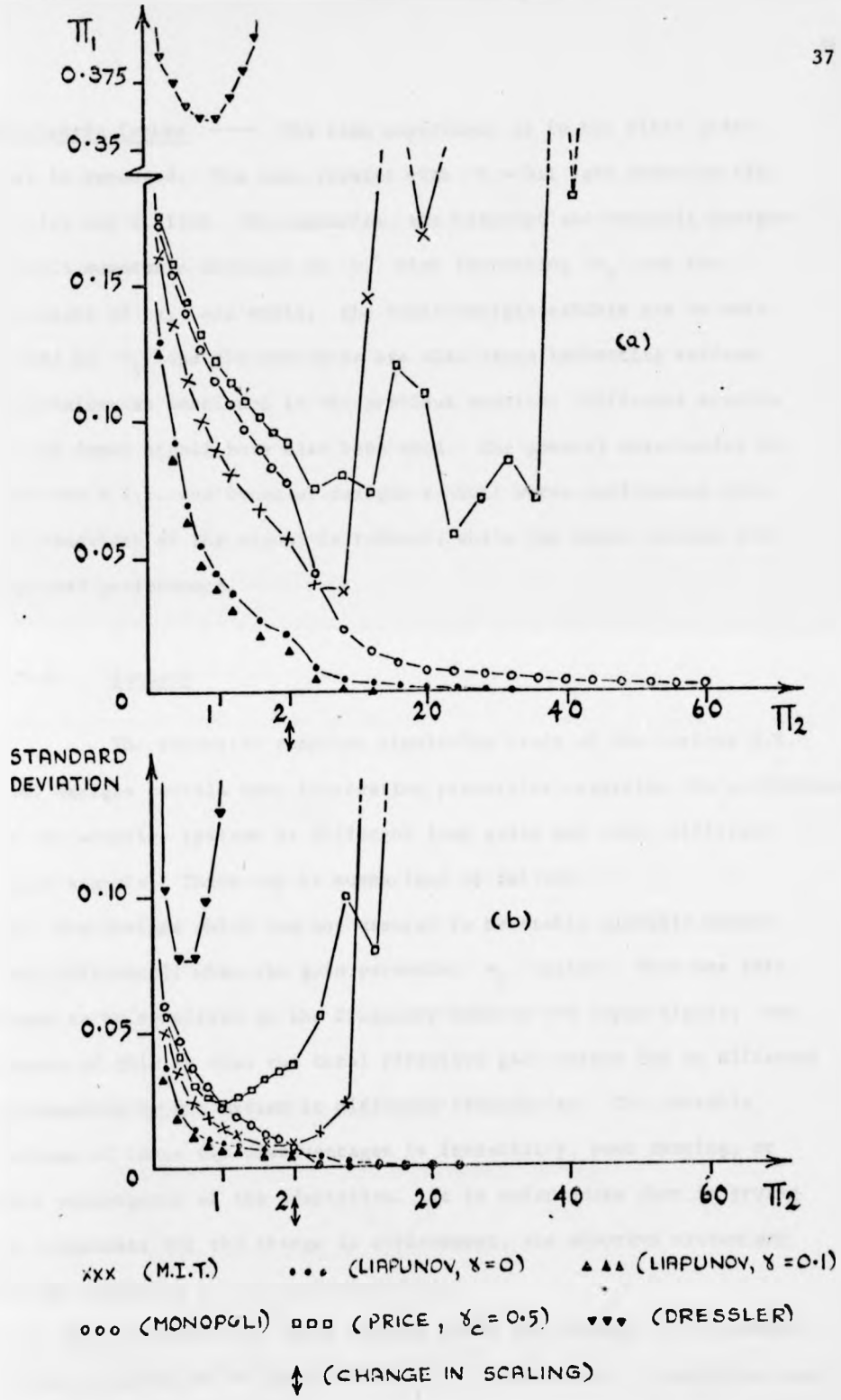

Fig. 2.11 Performance characteristics of second order systems with stochastic inputs.
Criterion : ISE.

Stochastic inputs ---- The same experiment as in the first order case is repeated. The main results with $h = 0.1$ are shown in Fig. 2.11(a) and 2.11(b). To summarise, the Liapunov and Monopoli designs exhibit monotonic decrease of π_1 with increasing π_2 and the variances of π_1 are small; the other designs exhibit one or more minima in π_1 and the variances are also large indicating serious uncertainty as mentioned in the previous section. Different spectra of the input signal have also been used. The general observation is that the M.I.T. and Dressler designs exhibit worse performance when the bandwidth of the signal is reduced, while the other designs show improved performance.

2.3.3. Summary

The extensive computer simulation study of the various M.R.A.C. designs reveals many interesting properties regarding the performance of the adaptive systems at different loop gains and under different input signals. These may be summarised as follows:

(1) The designs which are not assured to be stable globally behave very differently when the gain parameter π_2 varies. They are also found to be sensitive to the frequency band of the input signal; one reason of this is that the total effective gain varies due to different attenuation by the system at different frequencies. The possible outcome of these two disadvantages is instability, poor damping, or poor convergence of the adaptation. It is unfortunate that in trying to compensate for the change in environment, the adaptive system may become sensitive to its own parameters.

(2) The performance of those designs which are assured to be globally stable improves as the gain parameter π_2 increases. In addition they can be made less sensitive to the input signal magnitude and frequency

content by operating at larger values of π_2.

(3) Among the three schemes based on gradient methods, the Dressler design exhibits the worst performance characteristics especially when the input is sinusoidal or stochastic. The M.I.T. design is quite acceptable if the performance specification is not very strict. The design by Price performs better than the M.I.T. system with step or stochastic inputs but is inferior with sinusoidal inputs.

(4) The two designs based on stability consideration may achieve low values of π_1 not attainable by other designs. Between the two, the Liapunov scheme is better as it requires a lower value of π_2 to meet the same performance criterion. On interchanging the roles of the model and the plant, the case studied would become an identification system. Hence this investigation also reveals the shortcomings of those model reference identification schemes [37,38] based on gradient methods.

2.4. GENERAL DISCUSSIONS

In the previous sections, no attempt has been taken to include the study of more general parameter adjustments and the effects of noise and disturbance inputs. Hence an examination of these general concerns is in order and presented herewith.

2.4.1. General Parameter Adjustments [1,4,12]

Consider the plant with a transfer function

$$\frac{\theta_p(s)}{r(s)} = \frac{\sum_{i=o}^{n-1} b_{pi}\, s^i}{s^n + \sum_{i=o}^{n-1} a_{pi} s^i} \tag{2.12}$$

and the model of the same order but with b_{mi} and a_{mi} replacing

b_{pi} and a_{pi} respectively. The parameter adjustment laws using the M.I.T. rule, the Dressler rule and the Liapunov synthesis are shown in Table 2.1. For simplicity the proportional term in the Liapunov design is put to zero; the laws due to Price and Monopoli are also not included as they are extensions of the Dressler and Liapunov designs and hence trivial for the purpose of comparing structures.

Rules	M.I.T.	Dressler	Liapunov
$\dot{b}_{pi} =$	$\beta_i \cdot e_1 \cdot r_{if}$	$\beta_i \cdot e_1 \cdot \overset{(i)}{r}$	$\beta_i \cdot (\underset{\sim}{e}^T \underset{\sim}{P}_n) \cdot \overset{(i)}{r}$
$\dot{a}_{pi} =$	$-\alpha_i \cdot e_1 \cdot \Theta_{if}$	$-\alpha_i \cdot e_1 \cdot \overset{(i)}{\Theta}_m$	$-\alpha_i \cdot (\underset{\sim}{e}^T \underset{\sim}{P}_n) \cdot \overset{(i)}{\Theta}_p$

Table 2.1.

The $^{(i)}$ denotes the ith differentiation with respect to time and r_{if} and Θ_{if} are defined as

$$r_{if}(s) = \frac{s^i}{s^n + \sum_{i=o}^{n-1} a_{mi}\, s^i}\, r(s) \tag{2.13}$$

$$\Theta_{if}(s) = \frac{s^i}{s^n + \sum_{i=o}^{n-1} a_{mi}\, s^i}\, \Theta_p(s) \tag{2.14}$$

More details are to be found in appendix A.5.

From this table, it is seen that the Dressler rule is most easily implemented as it only involves e_1 and the derivatives of Θ_m which can be easily obtained from the model. If all b_{pi} and a_{pi} are to be simultaneously adjusted, the Liapunov synthesis is much more

economical compared to the M.I.T. rule since both require $\overset{(i)}{r}$ and $\overset{(i)}{\Theta}_p$ to be accessible. While the $\underset{\sim}{e}$ can be readily generated using $\overset{(i)}{\Theta}_p$ and $\overset{(i)}{\Theta}_m$, each r_{if} and Θ_{if} would require one additional filter having the same order as that of the model.

The Liapunov design has been synthesized to assure global asymptotic stability while the M.I.T. and Dressler designs could only be proved to be locally stable. It is observed that the stabilizing factor in the Liapunov design is due to the presence of $\underset{\sim}{e}$. In this aspect, the other designs which use e_1 only would seem to be less stable as the system order increases.

In short the M.I.T. rule is found most undesirable; the Dressler rule offers the advantage of simplicity while the Liapunov synthesis guarantees global asymptotic stability. It is sufficient here to mention that the reduction of the order of differentiation, the introduction of proportional damping and the treatment of time-varying parameters can easily be incorporated in the Liapunov design.

2.4.2. Effects of Noise

We shall analyse the effect of including the process and sensor noise in the plant output. Θ_p is assumed to be the only measurable output while r, r_{if} and Θ_m are assumed noise free. Thus Θ_p, $\overset{(i)}{\Theta}_p$, Θ_{if} and e will have noise components. As is well known in the case of parameter estimation system, the presence of noise components may introduce d.c. bias in the steady state values of the a_{pi} parameter and hence contribute to additional error to the plant output. To investigate this possibility, we shall make use of the following equation.

$$\dot{a} = \alpha \cdot e \cdot \Theta \tag{2.15}$$

Let e_0, Θ_0 and a_0 be the respective noise free values, e_n and Θ_n be the noise components in e and Θ, e_d and Θ_d be the errors

caused by the possible d.c. bias in the adjusted parameter. Hence

$$e = e_o + e_n + e_d \tag{2.16}$$

$$\Theta = \Theta_o + \Theta_n + \Theta_d \tag{2.17}$$

Taking the expected (time-averaged) value of $(e \cdot \Theta)$,

$$E[e \cdot \Theta] = E[(e_o + e_n + e_d) \cdot (\Theta_o + \Theta_n + \Theta_d)] \tag{2.18}$$

Assume that the noise components e_n and Θ_n have zero means and are uncorrelated with e_o, Θ_o, e_d and Θ_d so that

$$E[e_d \cdot \Theta_n + \Theta_o \cdot e_n + \Theta_d \cdot e_n] = 0 \tag{2.19}$$

Further in the steady state of parameter adjustments, $e_o \to 0$. Hence

$$E[e \cdot \Theta] = E[e_n \cdot \Theta_n + e_d \cdot (\Theta_d + \Theta_o)] \tag{2.20}$$

Now since $E[\dot{a}] = 0$ in the steady state, and using (2.15) and (2.20) we finally obtain

$$E[e_d \cdot (\Theta_d + \Theta_o)] = -E[e_n \cdot \Theta_n] \tag{2.21}$$

As e_n and Θ_n are highly correlated, $E[e_n \cdot \Theta_n] \neq 0$. Thus $e_d \neq 0$, $\Theta_d \neq 0$ and $a \neq a_o$. This confirms the notion that if e and Θ contain zero mean noise components, the steady state value of 'a' will contain a d.c. bias which eventually contributes towards additional error in Θ. It is also obvious that if $\Theta_n = \Theta_d = 0$ in equation (2.17), then $e_d = 0$.

Using the above results to examine the design rules as listed in Table 2.1, all the b_{pi} adjustments are unaffected by noise. The M.I.T. and Liapunov designs will give biased a_{pi} in the steady state while the Dressler design will give unbiased a_{pi}. The effect of having bias in a_{pi} (that is $a_{pi} \neq a_{mi}$ in the steady state) is to give additional error in the matching of model- plant outputs. This theoretical analysis is believed to be new and it supports the simulation observations

reported in two recent papers [33,34].

2.4.3. Noise and Disturbance Rejection

We have shown that the presence of zero mean noise at the plant output measurement may cause additional deviations in the parameter and the state errors in the steady state. Similarly one can show that any disturbance inputs in the process will have similar effects. Lindorff [33] has demonstrated that besides the possibility of causing instability during the transient adjustments, the steady state parameter error could be unbounded although the state error is still bounded. One such occurrence is when the input has insufficient frequencies in which case the parameter error would not be zero even without the effect of noise.

Until now there is no ready made modifications to include noise and disturbance rejection in the M.I.T. rule. On the contrary, some progress [33,34] in the modifications required in the Liapunov synthesis have been studied. These modifications are:

(1) To use

$$\dot{a}_{pi} + k_i\, a_{pi} = -\alpha_i \cdot (\underset{\sim}{e}^T \underset{\sim}{P}_n) \cdot \overset{(i)}{\Theta}_p \qquad (2.22)$$

Then a bound on a_{pi} and $\underset{\sim}{c}$ can be established which is inversely proportional to k_i.

(2) If the adjustable parameter is embedded in the input [14], then an additional input signal based on the so called input modification method can be designed to eliminate the effect of the disturbance.

2.5. CONCLUSIONS

This chapter has been devoted to the comparative studies of two popular design concepts for M.R.A.C. systems. These are the gradient approach such as the M.I.T. rule, the Dressler rule and the Price rule, and the synthesis approach using stability theories such as the Liapunov designs of Parks, Gilbart and Monopoli. The systematic performance comparison proves very worthwhile as it reveals many interesting properties of the performance of the various designs.

It is found that the advantage of using the gradient schemes is the relative ease in physical implementations. However these designs exhibit very complicated stability boundaries and hitherto no satisfactory theoretical tool could be used to predict their existence. Usually a tedious simulation is called for. In addition, they are shown in the performance study to possess very undesirable characteristics such as the performance criterion being a non-monotonic decreasing function of the dimensionless gain parameter. Hence they ought to be used with greater caution than previously thought.

On the other hand the design based on synthesis for assuring stability is found very attractive. It is globally asymptotically stable for all inputs and for any parameter deviations. Also the transient damping of the adaptive response can be readily controlled. Hence the only simulation required is to find the design parameters which satisfy the system specification. This is easily achieved as the performance criterion will always reduce with the dimensionless gain parameter. Also it could achieve smaller performance criteria not attainable by the gradient schemes. The only problem with this stable design rule lies in its physical implementation which requires either the complete plant states or $(n - m - 1)$ derivatives of the plant output.

An analysis of the noisy system reveals the nature of the noise biasing action which causes additional parameter and state deviations. The Dressler design is found insensitive to the noise while the M.I.T. and Liapunov designs are affected by noise and could even have unbounded steady state parameter errors. However modifications could be incorporated in the Liapunov design to achieve noise rejection so as to maintain Lagrange stability[13] of the entire system.

This study gives convincing evidences of the potentials of the design technique employing stability theories. It is hoped that further researches will be devoted to the development of this technique so that it can be easily implemented and hence will find a wider area of application. The following chapters will report on some efforts towards this end.

CHAPTER 3 - DESIGN OF MULTIVARIABLE M.R.A.C. SYSTEMS USING THE LIAPUNOV SYNTHESIS

3.1. INTRODUCTION

Model reference adaptive control systems as synthesized by means of the second method of Liapunov have been shown in the previous chapter to possess not only the property of global asymptotic stability for all inputs and all initial conditions, but also good performance properties. The design rule is also very flexible as the damping of the adaptive response can be easily adjusted by varying the values of the proportional (feedforward) gains in the parameter adjustment loops. A generalization of this synthesis approach, in a state space formulation which is especially suitable for multivariable systems has been suggested by Winsor and Roy [10] and Porter and Tatnall [19] for the case without the proportional damping terms. This has then been extended by Gilbart and Monopoli [12] to include the damping terms and the result is a general adaptive rule which can be easily written down and is very easy to use. A brief review of this general adaptive rule will, however, show that its application is restricted to the class of plants in which all the controllable parameters appear explicitly as individual elements of the plant and control matrices. In control problems where any controllable parameter may appear in two or more elements of these matrices simultaneously, a new set of design equations is needed. This is the subject of this chapter.

A slightly different but more common problem is the case where the plant parameters are not directly adjustable, an example being that posed by Winsor and Roy [10]. This problem is not considered here as solutions are already available in the literature [14,50,61]. The most effective solution is to introduce feedforward and feedback

gains around the plant to form a model following problem [61]; then as long as a structural model matching condition can be satisfied, unique parameter adjustment laws - according to the usual Liapunov synthesis - can be readily derived.

3.2. GENERAL ADAPTIVE RULE PREVIOUSLY SUGGESTED [10,12,19]

The linear plant is represented by

$$\dot{\underset{\sim}{y}}_p = A_p \underset{\sim}{y}_p + B_p \underset{\sim}{u} \tag{3.1}$$

where $\underset{\sim}{y}_p$ is an n state vector, $\underset{\sim}{u}$ is an r control vector, A_p is an $n \times n$ plant state matrix and B_p is an $n \times r$ control matrix. The elements of A_p and B_p are assumed to be slowly time-varying but unknown. The reference model is represented by

$$\dot{\underset{\sim}{y}}_m = A_m \underset{\sim}{y}_m + B_m \underset{\sim}{u} \tag{3.2}$$

in which the dimensionality of the model is the same as that of the plant. A_m and B_m are so chosen as to embody the desirable dynamic plant characteristics; in particular A_m is a stable matrix.

Define the response error vector as

$$\underset{\sim}{e} = \underset{\sim}{y}_m - \underset{\sim}{y}_p \tag{3.3}$$

The vector differential equation of this error is

$$\dot{\underset{\sim}{e}} = A_m \underset{\sim}{e} + (A_m - A_p) \underset{\sim}{y}_p + (B_m - B_p) \underset{\sim}{u} \tag{3.4}$$

It is assumed that all the elements of A_p and B_p can be adjusted individually to approach the corresponding elements of A_m and B_m. Hence we can define

$$\Delta A = A_m - A_p = [a_{ij}] \tag{3.5}$$

$$\Delta B = B_m - B_p = [b_{ij}] \tag{3.6}$$

The Liapunov function chosen is of the following form.

$$V = \underset{\sim}{e}^T P \underset{\sim}{e} + \sum_{i=1}^{n} \sum_{j=1}^{n} \frac{1}{\alpha_{ij}} a_{ij}^2 + \sum_{i=1}^{n} \sum_{j=1}^{r} \frac{1}{\beta_{ij}} b_{ij}^2 \tag{3.7}$$

To achieve asymptotic stability in the error state space, the parameter adjustment laws are chosen so that the time derivative of V becomes

$$\dot{V} = -\underset{\sim}{e}^T Q \underset{\sim}{e} \tag{3.8}$$

where the symmetric positive definite matrices P and Q satisfy the Liapunov matrix equation

$$A_m^T P + P A_m = -Q \tag{3.9}$$

The parameter adjustment laws mentioned above are

$$\dot{a}_{ij} = -\alpha_{ij} \left(\sum_{k=1}^{n} e_k P_{ki} \right) y_{pj} \tag{3.10}$$

$$\dot{b}_{ij} = -\beta_{ij} \left(\sum_{k=1}^{n} e_k P_{ki} \right) u_j \tag{3.11}$$

If the responses of these adaptive loops are found to be underdamped extra damping can be introduced, at the additional cost of only one summing amplifier for each parameter adaptive loop, by using a new Liapunov function,

$$V = \underset{\sim}{e}^T P \underset{\sim}{e} + \sum_{i=1}^{n} \sum_{j=1}^{n} \frac{1}{\alpha_{ij}} \left[a_{ij} + \alpha_{ij} \gamma_{ij} \left(\sum_{k=1}^{n} e_k P_{ki} \right) y_{pj} \right]^2$$

$$+ \sum_{i=1}^{n} \sum_{j=1}^{r} \frac{1}{\beta_{ij}} \left[b_{ij} + \beta_{ij} \delta_{ij} \left(\sum_{k=1}^{n} e_k P_{ki} \right) u_j \right]^2 \tag{3.12}$$

and a new $\dot{V}$

$$\dot{V} = -e^T Q e - 2 \sum_{i=1}^{n} \sum_{j=1}^{n} \alpha_{ij} \gamma_{ij} \left(\sum_{k=1}^{n} e_k P_{ki} y_{pj} \right)^2$$

$$- 2 \sum_{i=1}^{n} \sum_{j=1}^{r} \beta_{ij} \delta_{ij} \left(\sum_{k=1}^{n} e_k P_{ki} u_j \right)^2 \tag{3.13}$$

The resulting parameter adjustment laws are

$$\dot{a}_{ij} = -\alpha_{ij}(M_{aij} + \gamma_{ij}\dot{M}_{aij}) \tag{3.14}$$

$$\dot{b}_{ij} = -\beta_{ij}(M_{bij} + \delta_{ij}\dot{M}_{bij}) \tag{3.15}$$

$$M_{aij} = (\sum_{k=1}^{n} e_k P_{ki})\, y_{pj} \tag{3.16}$$

$$M_{bij} = (\sum_{k=1}^{n} e_k P_{ki})\, u_j \tag{3.17}$$

The additional damping is proportional to the values of γ_{ij} and δ_{ij}. The adaptive loop gains required to achieve a specified performance will also be reduced. It should be noted, however, that γ_{ij} and δ_{ij} cannot be increased indefinitely owing to a possible signal saturation problem when adaptation is switched in with a large initial response error [11].

These design equations are attractive since they do not require sensitivity filters, are simple to implement, are asymptotically stable in the response error state space, and the dynamic adaptive responses can be improved systematically. However the class of plants considered, as indicated in equations (3.5) and (3.6), is not general enough. For instance, if a controllable parameter appears simultaneously in $m(>1)$ elements of either the plant or the control matrix, the design algorithm will give m conflicting equations for the synthesis of the adaptive loop. An example is in order here.

Let

$$A_p = \begin{bmatrix} 1 & c \\ c & 1 \end{bmatrix}, \quad A_m = \begin{bmatrix} 1 & C_m \\ C_m & 1 \end{bmatrix}$$

then according to equation (3.16), we obtain

$$M_{a12} = (e_1 P_{11} + e_2 P_{21})\, Y_{p2}$$

$$M_{a21} = (e_1 P_{12} + e_2 P_{22})\, Y_{p1}$$

Now since $M_{a12} \neq M_{a21}$, neither of these can be used to form a stable design rule according to equation (3.14) for the adjustment of the c parameter.

More examples of such a situation will be discussed later. Next the solution to this problem is sought.

3.3. A MORE GENERAL DESIGN ALGORITHM

The same state space representation as equations (3.1) to (3.4) will be used. The class of systems considered is indicated in the following equations:

$$\Delta A = A_m - A_p = [f_{ij}(X_{a1}, X_{a2}, \text{-----}, X_{a\ell})] \tag{3.18}$$

$$\Delta B = B_m - B_p = [g_{ij}(X_{b1}, X_{b2}, \text{-----}, X_{bs})] \tag{3.19}$$

where the elements f_{ij} and g_{ij} are linear functions of the parameter errors X_{ah} and X_{bh} respectively. For instance $f_{11} = X_{a1}$, $f_{12} = X_{a1} + X_{a3}$, etc. are allowed while $f_{11} = X_{a1}^2$, $f_{12} = X_{a1} \cdot X_{a3}$, etc. are not allowed. There are $(\ell + s)$ adjustable parameters. First we shall choose a Liapunov function of the form:

$$V = \underset{\sim}{e}^T P \underset{\sim}{e} + \sum_{h=1}^{\ell} \frac{1}{\alpha_h} (X_{ah} + \alpha_h \gamma_h M_{ah})^2 + \sum_{h=1}^{s} \frac{1}{\beta_h} (X_{bh} + \beta_h \delta_h M_{bh})^2 \tag{3.20}$$

where α, β, γ, δ are constants and M_a and M_b are time-varying functions. Differentiating V with respect to time and combining with equation (3.4), we obtain

$$\dot{V} = -\underset{\sim}{e}^T Q \underset{\sim}{e} + 2\underset{\sim}{e}^T P(\Delta A)\, \underset{\sim}{y}_p + 2 \sum_{h=1}^{\ell} \frac{1}{\alpha_a} (X_{ah} + \alpha_h \gamma_h M_{ah})(\dot{X}_{ah} + \alpha_h \gamma_h \dot{M}_{ah})$$

$$+ 2\underset{\sim}{e}^T P(\Delta B)\, \underset{\sim}{u} + 2 \sum_{h=1}^{s} \frac{1}{\beta_h} (X_{bh} + \beta_h \delta_h M_{bh})(\dot{X}_{bh} + \beta_h \delta_h \dot{M}_{bh}) \qquad (3.21)$$

where P and Q satisfy equation (3.9). Next rearrange the elements in $(\Delta A)\, \underset{\sim}{y}_p$ and $(\Delta B)\, \underset{\sim}{u}$ such that

$$(\Delta A)\, \underset{\sim}{y}_p = [\underset{\sim}{Z}_{a1} \;\; \underset{\sim}{Z}_{a2} \;\; \text{------} \;\; \underset{\sim}{Z}_{a\ell}]\, \underset{\sim}{X}_a \qquad (3.22)$$

(n x ℓ matrix) (ℓ vector)

$$(\Delta B)\, \underset{\sim}{u} = [\underset{\sim}{Z}_{b1} \;\; \underset{\sim}{Z}_{b2} \;\; \text{------} \;\; \underset{\sim}{Z}_{bs}]\, \underset{\sim}{X}_b \qquad (2.23)$$

(n x s matrix) (s vector)

where each element of the vectors $\underset{\sim}{Z}_{ah}$ and $\underset{\sim}{Z}_{bh}$ may be a linear function of the plant states $\underset{\sim}{y}_p$ and control states $\underset{\sim}{u}$ respectively. Examples in Sections 3.4 and 3.5 will clarify this point. Now using equations (3.22) and (3.23), we obtain

$$\underset{\sim}{e}^T P\, (\Delta A)\, \underset{\sim}{y}_p = \sum_{i=1}^{\ell} (\underset{\sim}{e}^T P\, \underset{\sim}{Z}_{ai})\, X_{ai} \qquad (3.24)$$

$$\underset{\sim}{e}^T P\, (\Delta B)\, \underset{\sim}{u} = \sum_{i=1}^{s} (\underset{\sim}{e}^T P\, \underset{\sim}{Z}_{bi})\, X_{bi} \qquad (3.25)$$

If one then makes the following equalities:

$$(h=1,2,---,\ell) \quad \begin{cases} M_{ah} = \underset{\sim}{e}^T P\, \underset{\sim}{Z}_{ah} & (3.26) \\ \dot{X}_{ah} = -\alpha_h (M_{ah} + \gamma_h \dot{M}_{ah}) & (3.27) \end{cases}$$

$$(h=1,2,---,s) \quad \begin{cases} M_{bh} = \underset{\sim}{e}^T P\, \underset{\sim}{Z}_{bh} & (3.28) \\ \dot{X}_{bh} = -\beta_h (\dot{M}_{bh} + \delta_h \dot{M}_{bh}) & (3.29) \end{cases}$$

Equation (3.21) becomes

$$\dot{V} = -\underset{\sim}{e}^T Q \underset{\sim}{e} - 2 \sum_{h=1}^{\ell} \alpha_h \gamma_h (M_{ah})^2 - 2 \sum_{h=1}^{s} \beta_h \delta_h (M_{bh})^2 \qquad (3.30)$$

Hence equations (3.22), (3.23) and (3.26) to (3.29) constitute a unique design algorithm to synthesize the stable adaptive loops to achieve $\underset{\sim}{e} \to 0$ as $t \to \infty$ asymptotically. The quantities γ and δ play the same role in introducing extra damping as in those of section 3.2.

It is noted that if some adjustable parameters appear both in the A and B matrices, for instance if they are the forward or open-loop gains of a feedback system, then the corresponding terms in $(\Delta B)\underset{\sim}{u}$ can be grouped into $(\Delta A)\, \underset{\sim}{y}_p$ such that

$$(\Delta A)\underset{\sim}{y}_p + (\Delta B)\underset{\sim}{u} = \underset{(n \times \ell)}{[\underset{\sim}{Z}_{a1}\ \underset{\sim}{Z}_{a2} \cdots \underset{\sim}{Z}_{a\ell}]}\ \underset{(\ell x1)}{\underset{\sim}{X}_a} + \underset{(nxq)}{[\underset{\sim}{Z}_{b1}\ \underset{\sim}{Z}_{b2} \cdots \underset{\sim}{Z}_{bq}]}\ \underset{(qx1)}{\underset{\sim}{X}_b} \qquad (3.31)$$

where $q = s$ - number of common parameters.

$\underset{\sim}{Z}_{ah}$ is then a function of both $\underset{\sim}{y}_p$ and $\underset{\sim}{u}$. Such an example is given in section 3.5. Otherwise the design algorithm remains essentially the same. It is also not difficult to note that the less general design equations of Section 3.2 can be derived directly from those described in this section as a special case.

3.4. AN ILLUSTRATIVE EXAMPLE

Consider the adaptive control of a Ward-Leonard speed control system with a range of motor field weakening [6]. The block diagrams of the plant and reference model are shown in Fig. 3.1. The physical meanings of the mathematical symbols used are also given in the diagram. It should be noted that the magnetic flux ϕ_p, though it appears in two positions in the block diagram, is actually one parameter in the physical system and is only adjustable by varying the field current. Hence one would assume that $\phi_p = \phi_{pc} \cdot \phi_{pv}$ where ϕ_{pv} is the uncontrolled

flux and ϕ_{pc} is the corresponding adjustable factor. The desirable transient response of the speed control system is specified in the model with ϕ_m = a constant. The aim of the control is to adjust the controllable parameter ϕ_{pc} continuously to ensure that during the transient stage, $y_{p1} \to y_{m1}$ and $y_{p2} \to y_{m2}$ in the face of fluctuations in ϕ_{pv}.

The state equations of the system are:

$$\text{plant:} \quad \begin{bmatrix} \dot{y}_{p1} \\ \dot{y}_{p2} \end{bmatrix} = \begin{bmatrix} 0 & \phi_p \\ -K\phi_p & -a \end{bmatrix} \begin{bmatrix} y_{p1} \\ y_{p2} \end{bmatrix} + \begin{bmatrix} -d \\ Ku \end{bmatrix} \tag{3.32}$$

$$\text{model:} \quad \begin{bmatrix} \dot{y}_{m1} \\ \dot{y}_{m2} \end{bmatrix} = \begin{bmatrix} 0 & \phi_m \\ -K\phi_m & -a \end{bmatrix} \begin{bmatrix} y_{m1} \\ y_{m2} \end{bmatrix} + \begin{bmatrix} -d \\ Ku \end{bmatrix} \tag{3.33}$$

let $X = \phi_m - \phi_p$, $e_1 = y_{m1} - y_{p1}$, $e_2 = y_{m2} - y_{p2}$.

From equation (3.4),

$$\Delta A = \begin{bmatrix} 0 & X \\ -KX & 0 \end{bmatrix} \tag{3.34}$$

In this case, the algorithm of Section 3.2 is not applicable. Hence the new algorithm of Section 3.3 will be used. Following equation (3.22), we have

$$(\Delta A)\, \underset{\sim}{y}_p = \begin{bmatrix} y_{p2} \\ -K\, y_{p1} \end{bmatrix} X = \underset{\sim}{Z}_a X \tag{3.35}$$

Therefore the design according to equations (3.26) and (3.28) gives

$$M_a = (P_{11} Y_{p2} - P_{12} K Y_{p1}) e_1 + (P_{12} Y_{p2} - P_{22} K Y_{p1}) e_2 \tag{3.36}$$

$$\dot{X} = -\alpha(M_a + \gamma \dot{M}_a) \tag{3.37}$$

Providing that $\dot{\phi}_{pc}$ can be made much larger than $\dot{\phi}_{pv}$, we obtain

$$\dot{\phi}_{pc} = \frac{1}{\phi_{pv}} \dot{X} = \alpha'(M_a + \gamma'\dot{M}_a) \tag{3.38}$$

The block diagram of the adaptive loop designed according to equations (3.36) to (3.38) is shown in Fig. 3.2. A simulation study is then performed.

The following numerical data are used:

$K = 800, \quad a = 100, \quad \phi_m = 1,$

$d = 0.3, \quad G(s) = \dfrac{s + 10}{s} \quad ;$

for $t < 0, \quad \phi_{pc} = 1, \quad \phi_{pv} = 1, \quad R = 0.1;$

for $t \geq 0, \quad \phi_{pv} = 0.5, \quad R = 1.$

Select $\quad Q = \begin{bmatrix} 1 & 0 \\ 0 & 1 \end{bmatrix}$

and from equation (3.9) we obtain

$$P = \begin{bmatrix} 4.0625 & 0.000625 \\ 0.000625 & 0.005 \end{bmatrix}$$

The simulation is conducted for different values of the adaptive loop gain α' with $\gamma' = 0$. The state error responses with and without adaptive control are shown in Fig. 3.3. From these results the merit of the adaptive control is evident. Furthermore the magnitude and settling time of the response errors always reduce with increasing values of α'. However the damping suffers at larger α'. If this is not tolerable, then one would increase the value of γ' to introduce additional damping. For instance, when the same experiment is repeated with $\gamma' = 0.1$, the results are shown in Fig. 3.4. The magnitudes and oscillations of the error response have been very much reduced and this improved

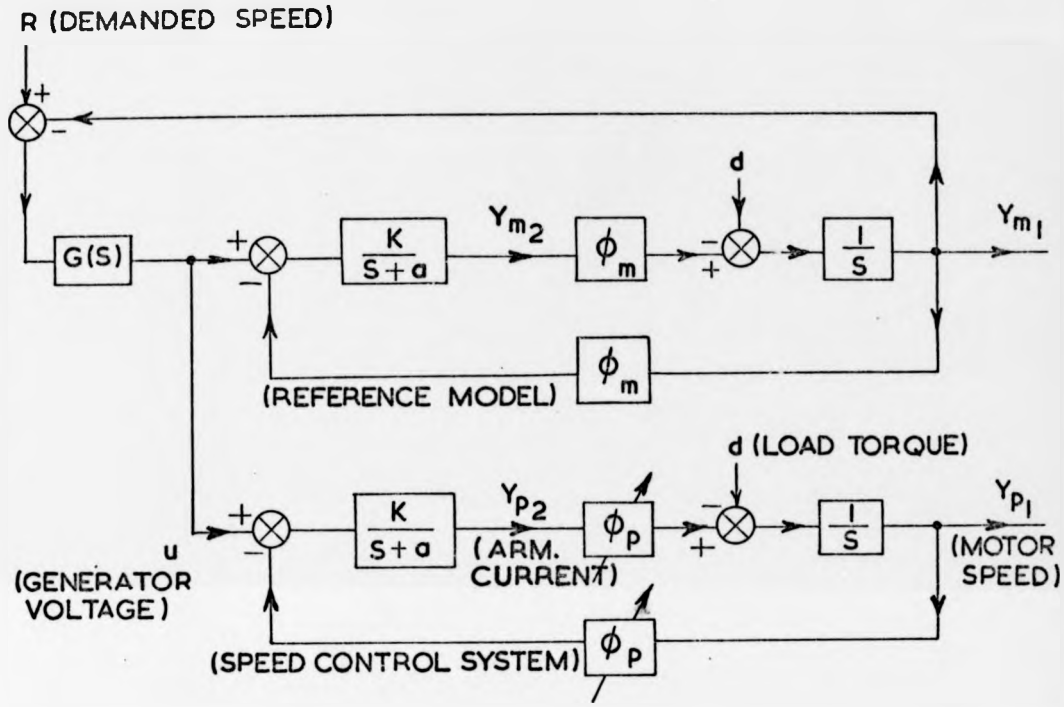

Fig. 3.1 A model reference adaptive speed control system

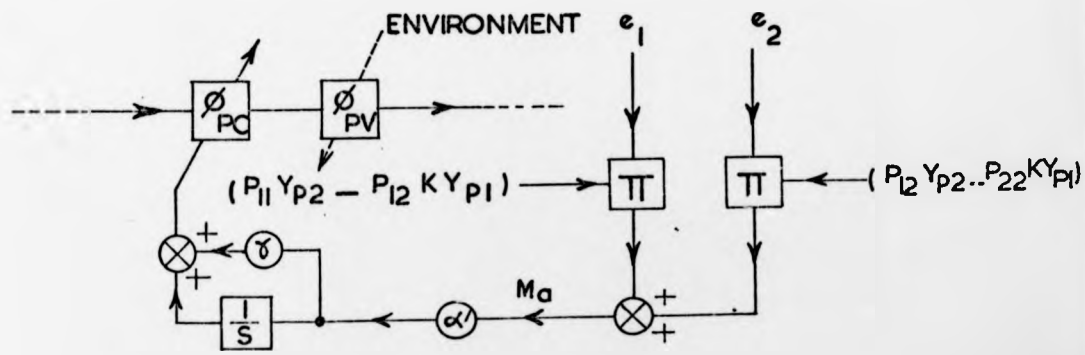

Fig. 3.2 The parameter adjustment loop

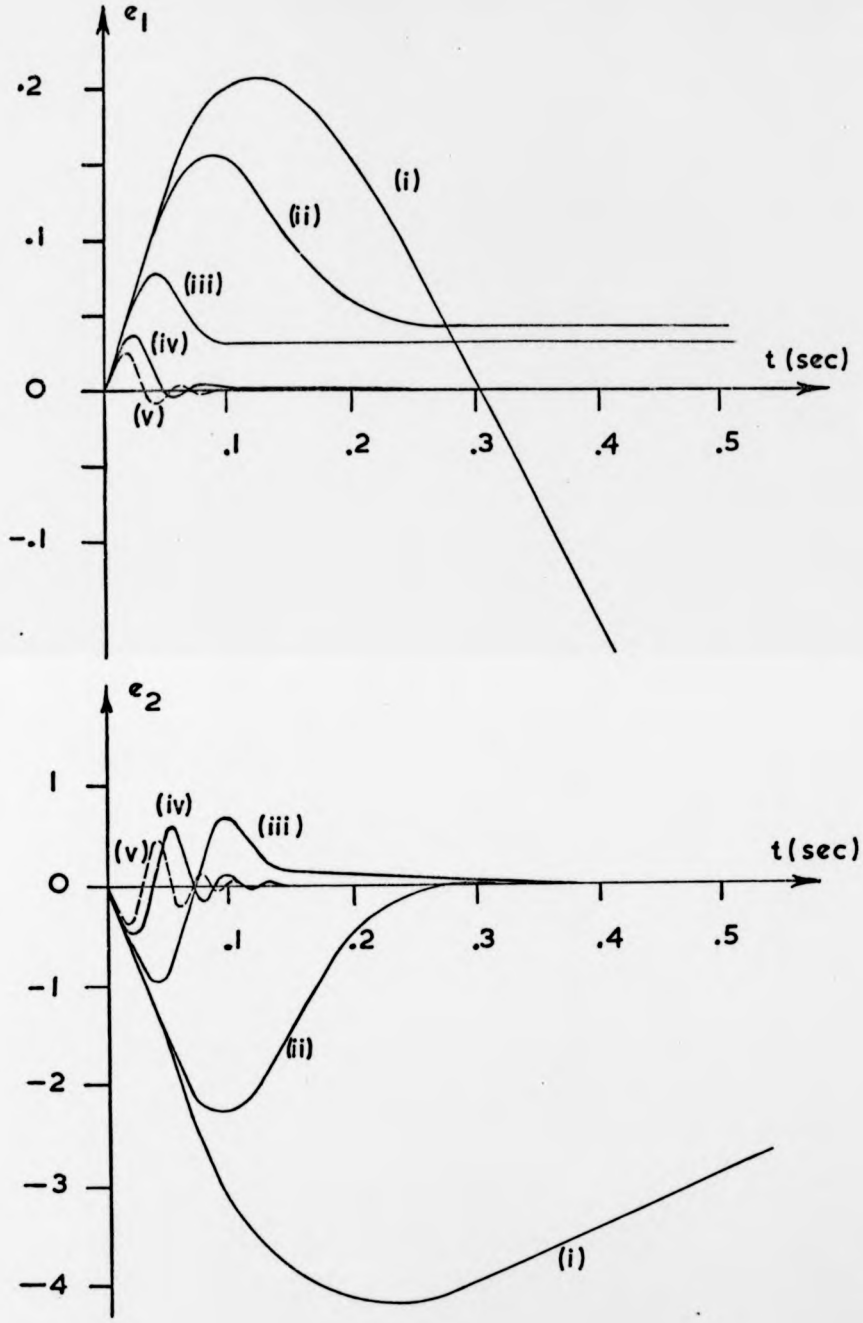

Fig. 3.3 Performance characteristics ($\gamma = 0$).
(i) $\alpha' = 0$, (ii) $\alpha' = 1$, (iii) $\alpha' = 10$,
(iv) $\alpha' = 50$, (v) $\alpha' = 100$.

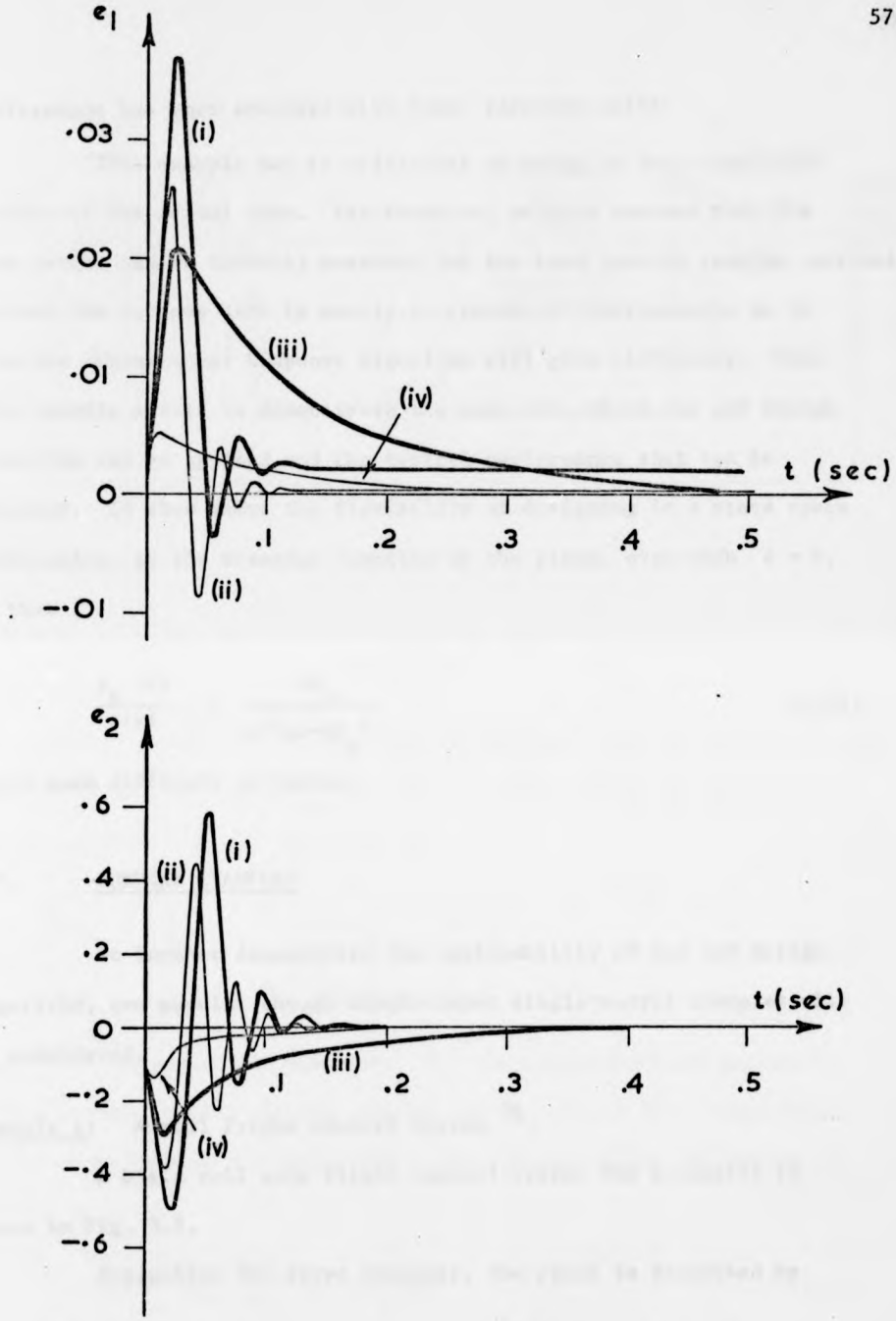

Fig. 3.4 Performance characteristics.
(i) $\gamma = 0$, $\alpha' = 50$. (ii) $\gamma = 0$, $\alpha' = 100$,
(iii) $\gamma = 0.1$, $\alpha' = 10$. (iv) $\gamma = 0.1$, $\alpha' = 50$.

performance has been achieved with lower adaptive gains.

This example may be criticized as being an over-simplified version of the actual case. For instance, we have assumed that the load torque can be directly measured and the load inertia remains constant. However the purpose here is merely to present a clear example as to when the conventional Liapunov algorithm will give difficulty. Then this example serves to demonstrate the ease with which the new design algorithm can be applied and the typical performance that can be obtained. It also shows the flexibility of designing in a state space formulation, as the transfer function of the plant, even with $d = 0$, so that

$$\frac{y_p(s)}{u(s)} = \frac{K\phi_p}{s^2+as+K\phi_p^{\,2}} \tag{3.39}$$

would seem difficult to handle.

3.5. FURTHER EXAMPLES

To further demonstrate the applicability of the new design algorithm, two popular though single-input single-output examples will be considered,

Example 1: A roll flight control system [36].

A basic roll axis flight control system for a missile is shown in Fig. 3.5.

Neglecting the servo dynamics, the plant is described by

$$\begin{bmatrix} \dot{y}_1 \\ \dot{y}_2 \end{bmatrix} = \begin{bmatrix} 0 & 1 \\ -\frac{k_a}{T_a} k_1 & -\frac{1}{T_a}(1 + k_a k_2) \end{bmatrix} \begin{bmatrix} y_1 \\ y_2 \end{bmatrix} + \begin{bmatrix} 0 \\ \frac{k_a}{T_a} k_1 \end{bmatrix} u \tag{3.40}$$

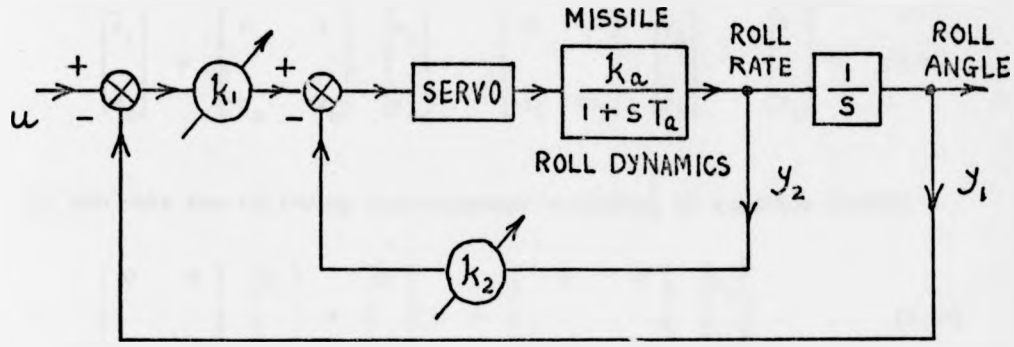

Fig. 3.5.

The purpose of M.R.A.C. is to maintain invariant control characteristics for different values of k_a and T_a at different flight envelopes. Hence one would specify the model as

$$\begin{bmatrix} \dot{y}_{m1} \\ \dot{y}_{m2} \end{bmatrix} = \begin{bmatrix} 0 & 1 \\ -b_m & -a_m \end{bmatrix} \begin{bmatrix} y_{m1} \\ y_{m2} \end{bmatrix} + \begin{bmatrix} 0 \\ b_m \end{bmatrix} u \tag{3.41}$$

Note that the adjustable parameter k_1 in equation (3.40) appears in both the state matrix and the control vector. Hence the conventional design algorithm is not applicable. Now one can define the parameter errors as

$$x_2 = a_m - \frac{1}{T_a} (1 + k_a k_2) \tag{3.42}$$

$$x_1 = b_m - \frac{k_a}{T_a} k_1 \tag{3.43}$$

then the error state equation becomes

$$\begin{bmatrix} \dot{e}_1 \\ \dot{e}_2 \end{bmatrix} = \begin{bmatrix} 0 & 1 \\ -b_m & -a_m \end{bmatrix} \begin{bmatrix} e_1 \\ e_2 \end{bmatrix} + \begin{bmatrix} 0 & 0 \\ -x_1 & -x_2 \end{bmatrix} \begin{bmatrix} y_1 \\ y_2 \end{bmatrix} + \begin{bmatrix} 0 \\ x_1 \end{bmatrix} u \qquad (3.44)$$

We can make the following rearrangement according to equation (3.31),

$$\begin{bmatrix} 0 & 0 \\ -x_1 & -x_2 \end{bmatrix} \begin{bmatrix} y_1 \\ y_2 \end{bmatrix} + \begin{bmatrix} 0 \\ x_1 \end{bmatrix} u = \begin{bmatrix} 0 & 0 \\ (u-y_1) & -y_2 \end{bmatrix} \begin{bmatrix} x_1 \\ x_2 \end{bmatrix} \qquad (3.45)$$

Hence we obtain

$$\underset{\sim}{Z}_{a1} = \begin{bmatrix} 0 \\ (u-y_1) \end{bmatrix}, \quad \underset{\sim}{Z}_{a2} = \begin{bmatrix} 0 \\ -y_2 \end{bmatrix}$$

Then, using the new design algorithm,

$$M_1 = (e_1 P_{12} + e_2 P_{22})(u-y_1) \qquad (3.46)$$

$$M_2 = -(e_1 P_{12} + e_2 P_{22}) y_2 \qquad (3.47)$$

Finally, differentiating equations (3.42) and (3.43) and assuming slow variations of k_a and T_a, and substituting into (3.27), the unique stable adjusting laws are

$$\dot{k}_1 = \alpha_1'(M_1 + \gamma_2 \dot{M}_1) \qquad (3.48)$$

$$\dot{k}_2 = \alpha_2'(M_2 + \gamma_1 \dot{M}_2) \qquad (3.49)$$

<u>Example 2</u>: A parameter tracking system.

In a model reference identification system, the parameters of a parallel model are to be adjusted to track those of the plant. Let us consider the following case,

plant:
$$\begin{bmatrix} \dot{y}_{p1} \\ \dot{y}_{p2} \end{bmatrix} = \begin{bmatrix} c_{p1} & c_{p2} \\ c_{p2} & c_{p3} \end{bmatrix} \begin{bmatrix} y_{p1} \\ y_{p2} \end{bmatrix} + \begin{bmatrix} c_{p4} \\ c_{p5} \end{bmatrix} u \tag{3.50}$$

adjustable model :
$$\begin{bmatrix} \dot{y}_{m1} \\ \dot{y}_{m2} \end{bmatrix} = \begin{bmatrix} a_{11} & a_{12} \\ a_{21} & a_{22} \end{bmatrix} \begin{bmatrix} y_{m1} \\ y_{m2} \end{bmatrix} + \begin{bmatrix} b_1 \\ b_2 \end{bmatrix} u \tag{3.51}$$

Now according to the conventional algorithm, unique adaptive laws to adjust a_{12} and a_{21} separately can be obtained. On the other hand, we can also use the new algorithm to obtain

$$\dot{a}_{12} = \dot{a}_{21} = -\alpha(M_{a2} + \gamma\dot{M}_{a2}) \tag{3.52}$$

$$M_{a2} = (e_1P_{11} + e_2P_{12})\, y_{m2} + (e_1P_{12} + e_2P_{22})\, y_{m1} \tag{3.53}$$

This would mean that the same integrator could be used to generate a_{12} and a_{21}. In general, $(\ell-1)$ integrators will be saved if there are ℓ similar parameters to be estimated.

Observation

From these examples and also the example in Section 3.4, we observe that the M_{ah} or M_{bh} according to the new design equation (3.26) or (3.28) is in fact equal to the summation of the original nonunique M_{aij} or M_{bij} respectively. This equivalence is difficult to express mathematically for a general case but will serve useful purpose of checking the new design.

3.6. CONCLUSIONS

The conventional Liapunov design algorithm to synthesize globally stable multivariable model reference adaptive control systems in state space formulations is reviewed. A more general design algorithm is then derived which caters for a wider class of systems, in which the adjustable parameters may appear simultaneously as a linear function in the elements of the plant and control matrices. The adaptive loops thus designed are asymptotically stable in the response error state space and the damping can be systematically adjusted to achieve an acceptable performance, as substantiated by the simulation studies of a speed control system. Other examples given also show that this generalization of the conventional Liapunov design algorithm is indeed useful as it extends the scope of application of the design method using stability theories.

CHAPTER 4 - DESIGN OF MODEL REFERENCE PARAMETER AND STATE ESTIMATION SYSTEMS

4.1. INTRODUCTION

This chapter is devoted to the investigation of a model reference system identification scheme as synthesized by Landau's hyperstability design rule. This design can be shown to be equivalent to the Liapunov design but is more convenient to use for identification systems. Also to distinguish this method from the well known G.E.E. method, we shall call this the Stable Response Error (S.R.E.) method.

This investigation has been divided into several parts. First the linear single-input single-output system is considered. The quality of the parameter estimates is analysed and the possibility of using the so called state variable filters (SVF) to relax the implementation difficulty of the S.R.E. method is fully explored. Then the use of the parameter estimation scheme for simultaneous state estimation (the so called adaptive state observer), when only the input and output are available, is developed. The emphasis on the design specification is that the adaptation must be globally asymptotically stable while the mean parameter estimates are unbiased. No attempt will be made to study the overall system stability when the parameter and state estimates are used for computing suitable adaptive controls for the plant. Finally some attention is given to the extension of the design laws to treat nonlinear systems and multivariable systems.

4.2. THE STABLE RESPONSE ERROR (S.R.E.) METHOD FOR PARAMETER ESTIMATION

This is a stable design rule using the response error as a measure of the model-plant matching and has been derived by Landau [50]

using the theory of hyperstability. The theory has been briefly introduced in Section 1.4 and its application to the design of model reference identification systems is separately discussed in appendix A.6. In the appendix the equivalence and mutual convertability of the hyperstability and Liapunov designs are pointed out. We select the hyperstability design here for its convenience in analysis when noise is present and also for the simplicity in the design for global stability. The analysis and development of this design method presented in the following will focus on a single dimensional system and will attempt to i) examine the role of the proportional damping loops, ii) relieve the implementation difficulty when the plant state vector is not accessible, and iii) point out the merits of this method over the G.E.E. method when operating with noisy records.

4.2.1. Statement of the Basic Problem

Given a linear time-invariant plant as shown in Fig. 4.1, with transfer function

$$\frac{N_p(s)}{D_p(s)} = \frac{\sum_{j=0}^{n-1} b_{pj}\, s^j}{s^n + \sum_{j=0}^{n-1} a_{pj}\, s^j} \tag{4.1}$$

and a model with transfer function

$$\frac{N_m(s)}{D_m(s)} = \frac{\sum_{j=0}^{n-1} b_{mj}\, s^j}{s^n + \sum_{j=0}^{n-1} a_{mj}\, s^j} \tag{4.2}$$

the estimation problem is to determine the design laws for adjusting the parameters b_{mj} and a_{mj} so that the error e_1 between the plant output Θ_p and the model output Θ_m is reduced to zero asymptotically. It will be assumed that the input signal is active

enough so that $e_i \to o$ implies $b_{mj} \to b_{pj}$ and $a_{mj} \to a_{pj}$. This "identifiability" condition is identical to that of the G.E.E. method[46] and some details are given here in appendix A.7. It is also assumed that the only measurable signals are the input u and the output Θ_p; the derivatives of these signals or other plant states are not directly measurable. The hyperstability design will utilize a generalized error $v_1(t)$, also shown in Fig. 4.1, which is obtained by processing the error $e_1(t)$ through a linear series compensator of the form $Z_1(s) = \sum_{i=0}^{\ell} z_i s^i$. The function and design of $Z_1(s)$ will be discussed later.

4.2.2. The Basic Design Rule

Using a state space formulation the system dynamics are described by

$$\text{plant} \quad \begin{cases} \dot{\underset{\sim}{y}}_p = A_p \underset{\sim}{y}_p + B_p \underset{\sim}{u} & (4.3) \\ \Theta_p = C_1 \underset{\sim}{y}_p & (4.4) \end{cases}$$

$$\text{model} \quad \begin{cases} \dot{\underset{\sim}{y}}_m = A_m(t) \underset{\sim}{y}_m + B_m(t) \underset{\sim}{u} & (4.5) \\ \Theta_m = C_1 \underset{\sim}{y}_m & (4.6) \end{cases}$$

$$\text{error} \quad \begin{cases} e_1 = \Theta_p - \Theta_m & (4.7) \\ v_1(s) = Z_1(s).e_1(s) & (4.8) \end{cases}$$

where $\underset{\sim}{y}$ and $\underset{\sim}{u}$ are in phase variable forms, i.e.

$$\underset{\sim}{y}^T = \left[y \quad \dot{y} \quad \cdots \quad y^{(n-1)} \right] \qquad (4.9)$$

$$\underset{\sim}{u}^T = \left[u \quad \dot{u} \quad \cdots \quad u^{(n-1)} \right]$$

and A, B, C_1 matrices are in the following forms.

$$A = \begin{bmatrix} 0 & 1 & 0 & . & . & . & 0 \\ 0 & 0 & 1 & . & . & . & 0 \\ . & . & & & & & . \\ . & . & & & & & . \\ . & . & & & & & 1 \\ -a_0 & -a_1 & & . & . & . & -a_{n-1} \end{bmatrix},$$

$$B = \begin{bmatrix} 0 & . & . & . & . & 0 \\ . & & & & & . \\ . & & & & & . \\ . & & & & & . \\ . & & & & & . \\ b_0 & b_1 & . & . & . & b_{n-1} \end{bmatrix},$$

$$C_1 = \begin{bmatrix} 1 & 0 & . & . & . & 0 \end{bmatrix} \tag{4.10}$$

Hence only the bottom row of A and B contains the unknown parameters and we obtain

$$G = \begin{bmatrix} 0 \\ . \\ . \\ . \\ . \\ 0 \\ 1 \end{bmatrix} \tag{4.11}$$

These forms of matrices A, B and C_1 are chosen for the following reasons:

(i) the parameters to be estimated appear in the same row in the A and the B matrices, as required in hyperstability designs (appendix A.6.);

(ii) the equivalent linear block of the hyperstable system without the compensator has a transfer matrix $C_1\ (sI-A)^{-1}G$ which reduces to a transfer function $\frac{1}{D_p(s)}$ for the chosen A

and C_1; thus the design of the compensator becomes much simpler;

(iii) the application of state variable filtering in Section 4.2.4 becomes straight forward.

The system described by equations (4.3) - (4.8) is seen to be a special case of the more general system discussed in appendix A.6. Hence the hyperstability design can be stated as follows:

(1) the linear series compensator is such chosen that the transfer function

$$Z_1(s)\ C_1\ (sI-A_p)^{-1}\ G$$

which can be worked out as

$$\frac{Z_1(s)}{D_p(s)}$$

is strictly positive real;

(2) the adaptive equations are given by:

$$\dot{a}_{mj} = -\alpha_j v_1 y_{mj} - \gamma_j \frac{d}{dt}(\alpha_j v_1 y_{mj}) \tag{4.12}$$

$$\dot{b}_{mj} = \beta_j v_1 u_j + \delta_j \frac{d}{dt}(\beta_j v_1 u_j) \tag{4.13}$$

A block diagram of the design is shown in Fig. 4.2. Note that we make a change of sign here. The v_1 in equation (4.12) and (4.13) is actually the v_n in the appendix since the adjustable parameters appear only in the n row of the A and B matrices. We use v_1 here to emphasize that it is obtained by processing e_1 through the compensator. The role of the compensator $Z_1(s)$ is now apparent from condition (1) above. Its function is to ensure the global asymptotic stability of the parameter adjustments for any initial parameter estimates and for any type of input signals. However if the complete plant states are not available, the compensator will have to be implemented using pure differentiations which would cause a noise

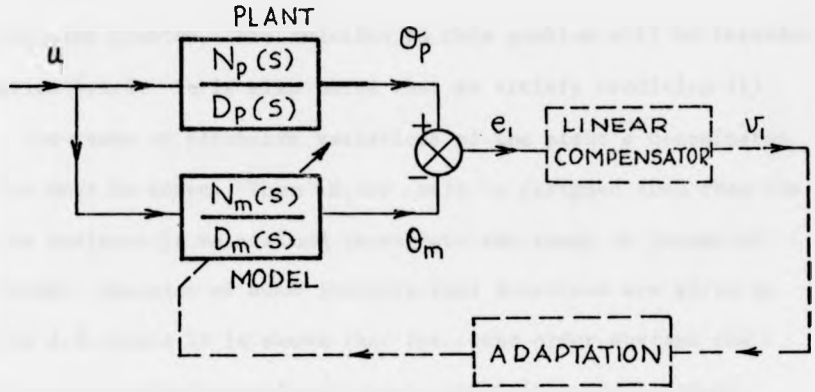

Fig. 4.1

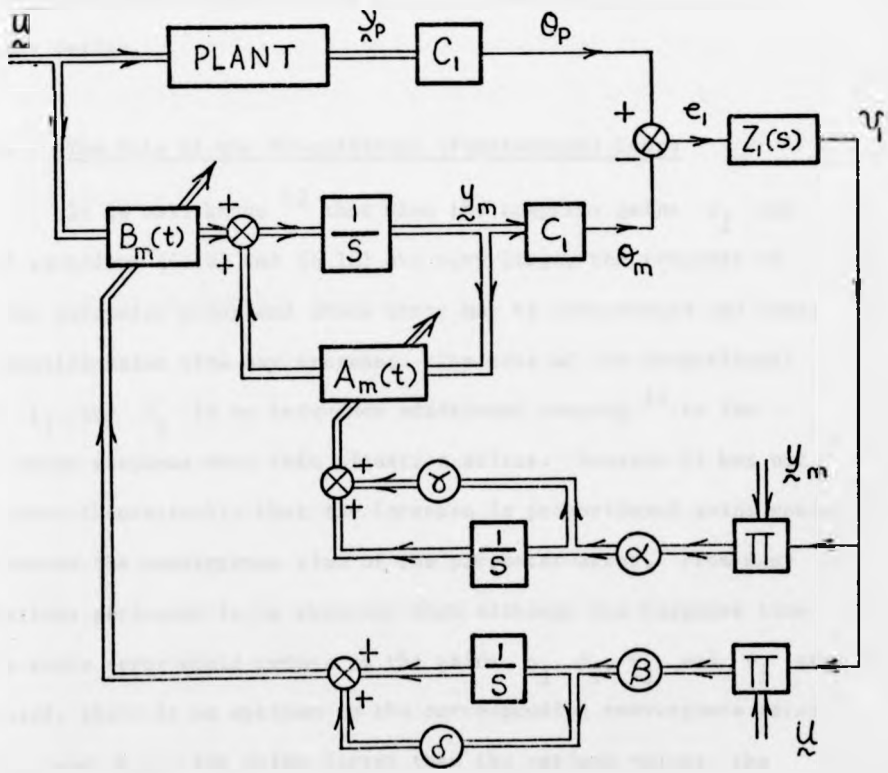

Fig. 4.2 The basic S.R.E. design

amplification problem. The solution to this problem will be introduced in Section 4.2.4. It is also noted that to satisfy condition (1) above, the range of parameter variations of the plant's denominator dynamics must be known. Then $Z_1(s)$ will be designed such that the positive realness is maintained throughout the range of parameter variations. Examples of some positive real functions are given in appendix A.8. where it is shown that for lower order systems the conditions for positive realness can be explicitly expressed as algebraic functions of the bound on parameters and that for higher order systems, some computer search methods are available. The design of $Z_1(s)$ is hence quite systematic and easier than the solution of the Liapunov matrix equation with parameter variations as in the Liapunov design.

4.2.3. The Role of the Proportional (Feedforward) Loops

It is well known [12] that when the adaptive gains α_j and β_j of equations (4.12) and (4.13) are very large, the response of both the parameter error and state error may be underdamped and hence the identification time may increase. The role of the proportional gains γ_j and δ_j is to introduce additional damping [12] to the state error response when this situation arises. However it has not been shown theoretically that the increase in proportional gains would also reduce the convergence time of the parameter error. From many simulations performed it is observed that although the response time of the state error would reduce as the gains α_j, β_j, γ_j and δ_j are increased, there is an optimum in the corresponding convergence rates of a_{mj} and b_{mj}. For gains larger than the optimum values, the response time for the adjustable parameters will increase although that for the state error will continue to decrease. The most likely

reason is due to the interaction of parameter adjustments since they are not designed to be orthogonal.

Another limit on the amount of proportional damping arises when significant noise is present at the plant output. In such a case the noise component will by-pass the integrator of the adaptive loops and cause high variance in the estimate. Fortunately it has been noted from simulations that when the noise level is high, the adaptive gains will have to be reduced to maintain small variance of the estimates. Hence the underdamped phenomenon would never occur and the proportional gains are not required to be increased. For other intermediate cases suitable values of γ_j and δ_j can be found by simulation. It has also been observed that the proportional terms help to reject disturbance (for instance those caused by residual d.c. drifts) and hence it may be useful to have some proportional gains even when they are not at all required to provide additional damping.

4.2.4. The State Variable Filters

In the G.E.E. method the so called state variable filter (SVF) technique [41-45] has been used extensively to avoid the direct measurement of input and output derivatives. A previous attempt by B. Courtiol [62] to apply this technique to the S.R.E. method was not entirely successful as the resultant scheme is not globally stable. In the following a different way of using the SVF is introduced which avoids this limitation.

Consider the single-input single-output linear time-invariant system described by the following differential equation:

$$\sum_{j=0}^{n} a_j D^j \theta_p(t) = \sum_{j=0}^{m} b_j D^j u(t) \tag{4.14}$$

where

$$D^j = \frac{d^j}{dt}$$

The input $u(t)$ and output $\Theta_p(t)$ are processed by two identical filters having a transfer function of $\frac{P(s)}{Q(s)}$ as shown in Fig. 4.3. Now since the commutation of operators is allowed for the time-invariant system [44,45] one can easily show that the following equation holds after $t > \varepsilon$.

$$\sum_{j=0}^{n} a_j D^j \Theta_{pf}(t) = \sum_{j=0}^{m} b_j D^j u_f(t) \tag{4.15}$$

where

$$\Theta_{pf}(s) = \frac{P(s)}{Q(s)} \Theta_p(s) \tag{4.16}$$

$$u_f(s) = \frac{P(s)}{Q(s)} u(s) \tag{4.17}$$

and the filter should have sufficient bandwidth so that the initial conditions of $u(t)$ and $\Theta_p(t)$ die out quickly and hence their effect can be neglected after a small time interval ε immediately following the initiation of the filtration. Also the bandwidth of the filter should at least encompass that covered by the plant so that no useful information on the plant dynamics are lost by filtering. The function of the filter is now apparent since

$$s^j \Theta_{pf}(s) = \frac{s^j P(s)}{Q(s)} \Theta_p(s) \tag{4.18}$$

$$s^j u_f(s) = \frac{s^j P(s)}{Q(s)} u(s) \tag{4.19}$$

and no pure differentiation is involved in generating these signals provided the order of $Q(s)$ is larger or equal to the sum of the order of $P(s)$ and the order of the highest derivative. Usually $P(s)$ is chosen to provide d.c. blocking to attenuate the bias level in the measured signals.

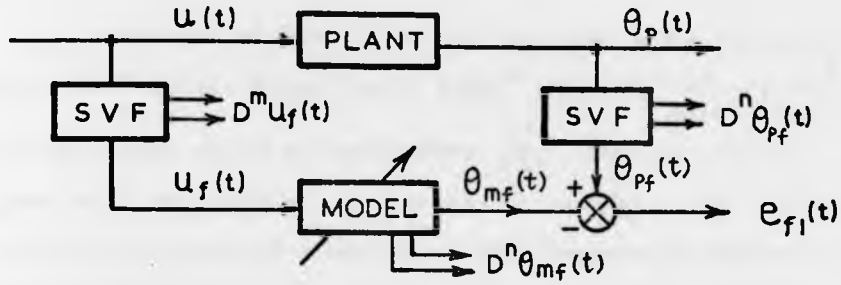

Fig. 4.3 The state variable filters technique

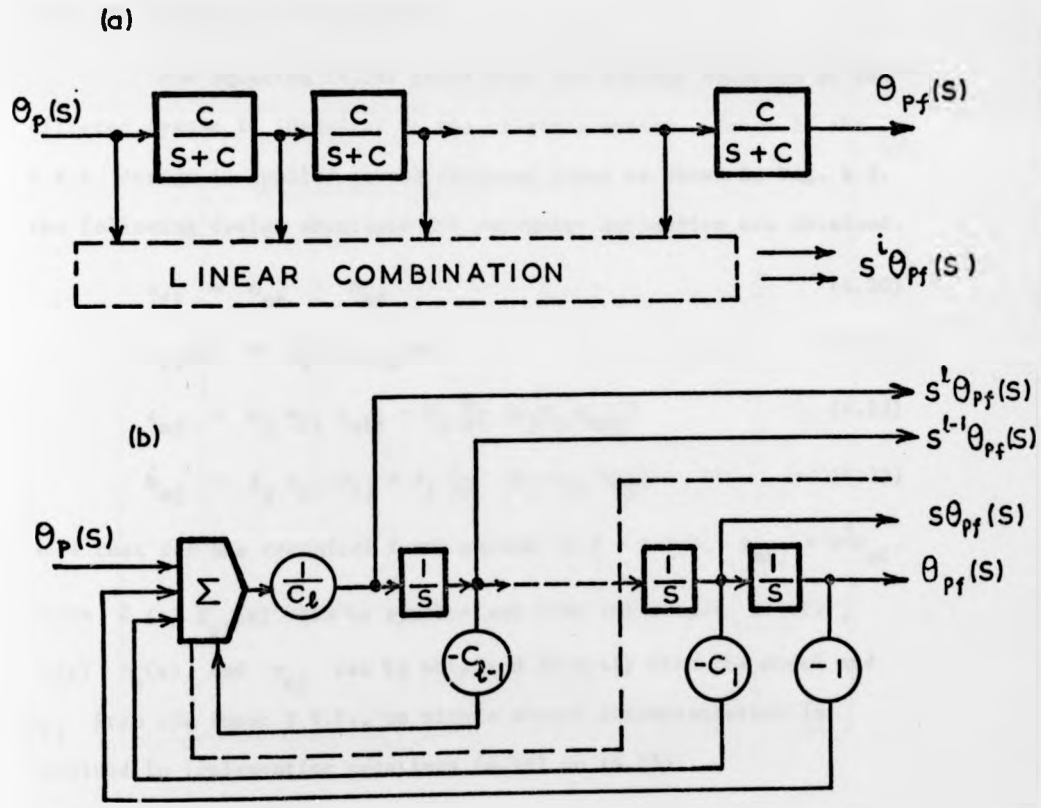

Fig. 4.4 (a) Multiple filters due to Young
(b) Filter due to Khor

Two types of filters have been suggested in the literature. One is the "multiple filter" due to Young[44]. He uses $\frac{1}{Q(s)} = \left(\frac{c}{s+c}\right)^{\ell}$ as shown in Fig. 44(a), and synthesizes $\frac{s^j}{Q(s)}$ from the signals appearing at the output of each low pass filter $\frac{c}{s+c}$. This has the advantage in the ease of scaling if a hybrid computer is employed in the estimation scheme. The other type of filter is due to Khor[42]. He uses $Q(s) = 1 + \sum_{i=1}^{\ell} C_j S^j$ as shown in Fig. 44(b). The $s^j \Theta_{pf}(s)$ signal is tapped from the input to the jth integrator from the output of the filter. This method is more general and easier to use than the multiple filter method.

Now equation (4.15) shows that the dynamic equation of the filtered system is identical to the original system. Hence if the S.R.E. design is applied to the filtered plant as shown in Fig. 4.3, the following design equations for parameter estimation are obtained:

$$e_{f1} = \Theta_{pf} - \Theta_{mf} \tag{4.20}$$

$$v_{f1}(s) = Z_1(s)\, e_{f1}(s) \tag{4.21}$$

$$\dot{a}_{mj} = \alpha_j\, v_{f1}\, y_{mfj} - \gamma_j \frac{d}{dt}(\alpha_j v_{f1} y_{mfj}) \tag{4.22}$$

$$\dot{b}_{mj} = \beta_j\, v_{f1}\, u_{fj} + \delta_j \frac{d}{dt}(\beta_j\, v_{f1}\, u_{fj}) \tag{4.23}$$

Note that for the canonical forms chosen (4.9 - 4.10), $y_{mfj} = D^j \Theta_{mf}$. Since $Z_1(s)\, \Theta_{pf}(s)$ can be synthesized from the output S.V.F., $Z_1(s)\, \Theta_m(s)$ and y_{mj} can be obtained directly from the model and u_{fj} from the input S.V.F., no single direct differentiation is involved in implementing equations (4.20) to (4.23).

As an example, consider a second order plant which has a transfer function

$$\frac{N_p(s)}{D_p(s)} = \frac{b_{p1}\, s + b_{po}}{s^2 + a_{p1}\, s + a_{po}}$$

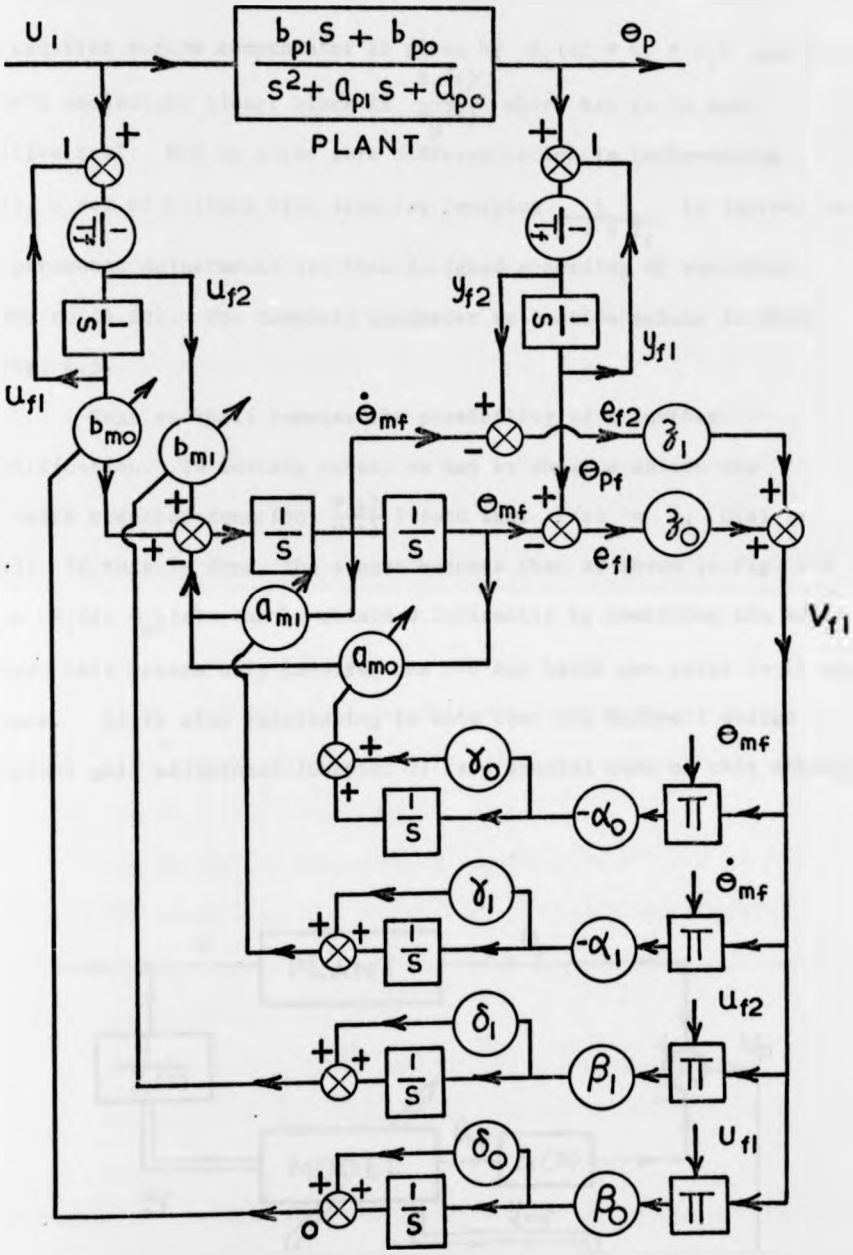

Fig. 4.5 The S.R.E. design for a 2nd order system.
$(z_1 > 0,\ z_o \geq 0,\ \frac{z_o}{z_1} \leq a_{p1_{min}})$

The required series compensator is given by $Z_1(s) = z_0 + z_1 s$ and the Popov's equivalent linear block is $\frac{Z_1(s)}{D_p(s)}$ which has to be made positive real. Now to avoid pure differentiation in implementing $Z_1(s)$, a set of filters with transfer function $\frac{1}{1 + s\,T_f}$ is introduced. The parameter adjustments are then designed according to equations (4.20) to (4.23). The complete parameter estimation scheme is shown in Fig. 4.5.

Next we shall examine the possibility of a further simplification. In certain cases, we may be able to choose the SVF (with transfer function $\frac{P(s)}{Q(s)}$) such that $P(s) = 1$, $Q(s) = Z_1(s)$. If this is done, the scheme becomes that as shown in Fig. 4.6. Since $Z_1(s)\,\Theta_{mf}(s)$ can be obtained indirectly by combining the model states, this scheme only requires one SVF and hence one saves (n-1) integrators. It is also interesting to note that the Monopoli design for plant gain adjustment (Chapter 2) is a special case of this scheme.

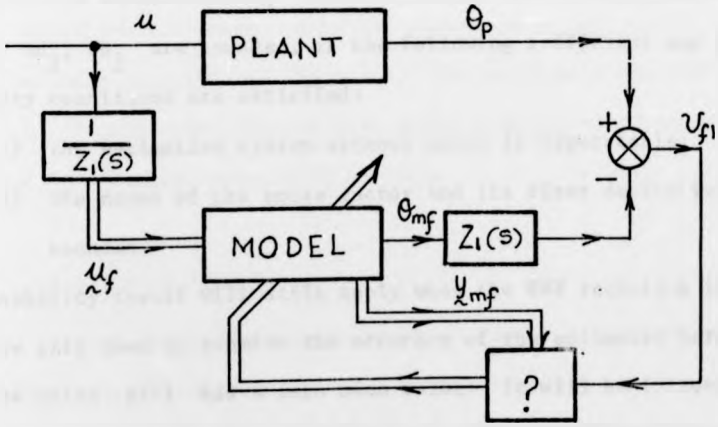

Fig. 4.6.

4.2.5. Noise Contamination

So far we have assumed an ideal case in the derivation of the design laws, where there is no noise contamination in the measured variables and the plant is linear, time-invariant while the model has the same order as that of the plant. The relaxation of all these assumptions has been examined by Landau [51] again using the powerful Popov's hyperstability theorem. He has shown that the S.R.E. design method is still applicable to a large number of practical cases.

In the following the effect of noise is further examined. We shall put the proportional adaptive gains γ_j and δ_j to zero for convenience and also for a reason discussed in Section 4.2.3 - i.e. these gains must be chosen fairly small to reduce the variance of the estimates when significant noise is present.

First we shall state the following result obtained by Landau [51] when noise is present at the plant output (noise inherent or due to the measuring transducer).

The estimation scheme using equations (4.12) and (4.13) is stable in the sense that v_1 is bounded, and hence the parameter errors Δd_j, Δb_j are bounded, if the following sufficient and partially necessary conditions are satisfied:

i) the estimation system without noise is hyperstable;

ii) the norms of the noise vector and its first derivatives are bounded.

This stability result will still apply when the SVF technique is used. Hence we only need to examine the accuracy of the estimates here. Assume that the noise $n(t)$ has a zero mean value. It will be filtered by the SVF to become $n_f(t)$ which superimposes on the noise-free error $e_f(t)$. It finally appears as $n_f'(t)$, after being processed by the series compensator, on the noise-free $v_f(t)$. Assuming that the model output is almost

noise-free (due to the integrator in the adaptive loop and also the low-pass model itself, as demonstrated later in the simulation), the parameter adjustment laws become:

$$\dot{a}_{mj} = -\alpha_j \, (v_f + \eta_f') \; y_{mfj} \tag{4.24}$$

$$\dot{b}_{mj} = \beta_j \, (v_f + \eta_f') \; u_{fj} \tag{4.25}$$

Since u_{fj} and y_{mfj} are not correlated with η_f', we have

$$E\left[\eta_f' \cdot y_{mfj}\right] = E\left[\eta_f' \cdot u_{fj}\right] = 0 \tag{4.26}$$

Hence the estimates of a_{mj} and b_{mj} are asymptotically unbiased.

The above result is in contrast to the G.E.E. method [41-46], a short account of which is given in appendix A.9. With the G.E.E. method, all a_{mj} are asymptotically biased. If the spectrum of the noise is much higher than that of the process, the bandwidth of the SVF may be suitably chosen to attenuate the bias. For more noisy measurements, it will have to be used in conjunction with the so called "Instrumental Variable (IV)" [41,45] method to remove the noise-biasing effect. But this is obtained at the expense of losing the global stability assurance. A brief comparison of the S.R.E. and G.E.E. methods are given in Table 4.1. The economy of the S.R.E. method is evident. Its economy over other response error methods has been demonstrated previously by Parks [48].

4.2.6. Simulation Results

The second order example shown in Fig. 4.5 has been studied in detail using digital simulation. The plant output Θ_p is corrupted by a zero mean, band-limited Gaussian white noise. The generation of this noise signal has been discussed in appendix A.4. The band-width of the noise is about ten times that of the plant and R.M.S. values are used to measure the noise-signal ratio.

Method \ Hardware		Integrators	Multipliers	Remarks
SRE	(Fig. 4.3)	5n-2 (8)	4n (8)	globally stable and unbiased
	(Fig. 4.6)	4n-1 (7)	4n (8)	
G.E.E.		4n (8)	4n (8)	globally stable but biased
G.E.E. and IV network		6n (12)	6n (12)	bias removed but not globally stable
Multiple G.E.E. (Ref. 43)		8n-2 (14)	$8n^2$ (32)	globally stable but biased; rapid convergence

Table 4.1. Hardware Comparisons (bracketed numbers refer to a 2nd order case).

Fig. 4.7 shows a typical result of the parameter identification together with the identification (response) error $e_1(t)$ when all the four parameters of the plant $(s + 0.5) / (s^2 + 2s + 1)$ are assumed unknown. The input is a unity magnitude pseudo random binary sequences (PRBS). The convergence time achieved is about fifteen system time constants. The variance of the estimate in the steady state is caused

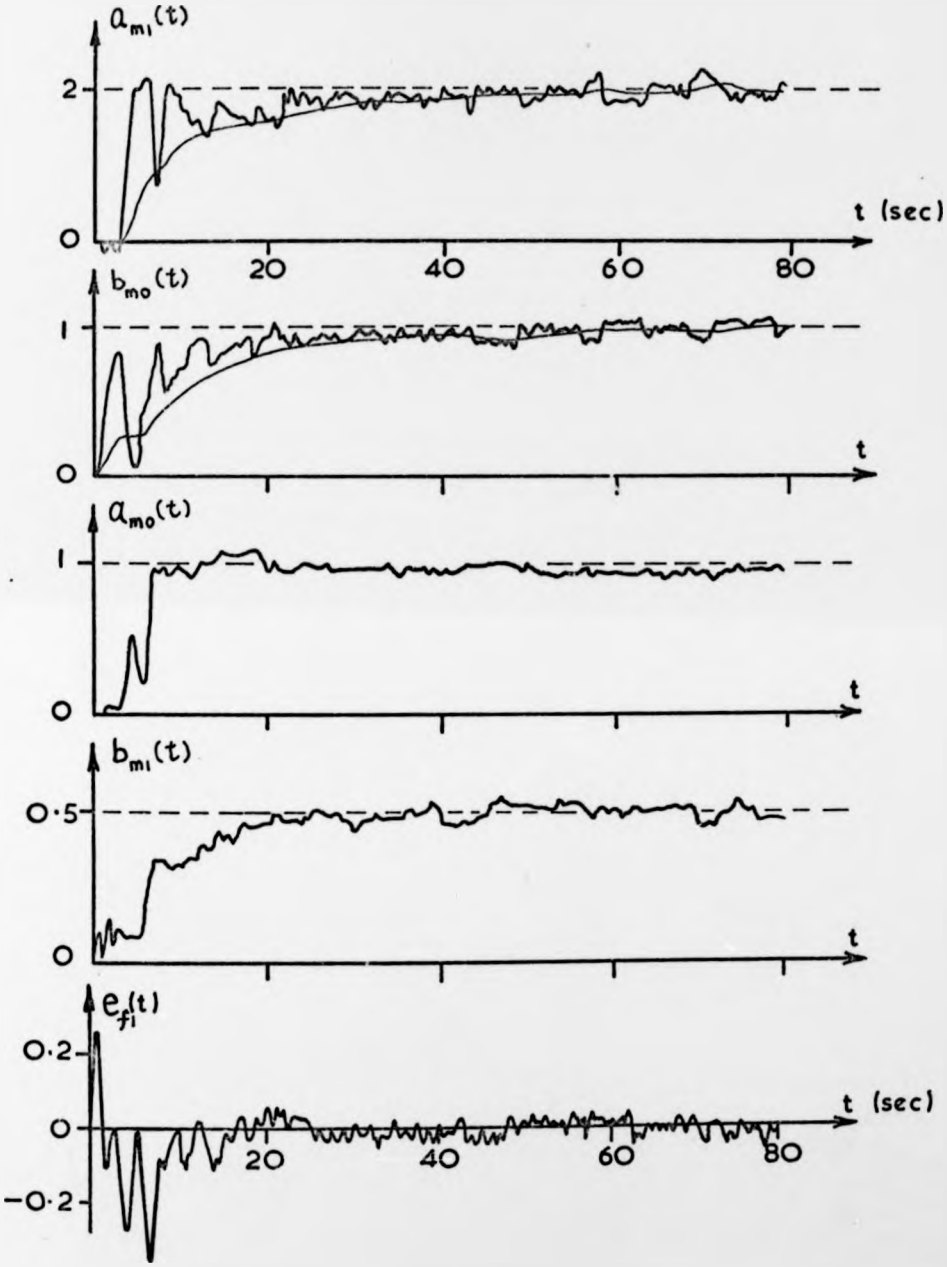

Fig. 4.7 Identification results for a linear system.
Plant TF = $(b_1 s + b_0)/(s^2 + a_1 s + a_0)$; input = P.R.B.S.
Noise/signal = 0.1; --- for true values ; $T_f = 0.5$.
$Z_1(s) = 0.5 + s$, $\alpha_1 = 10$, $\alpha_0 = \beta_0 = 2$, $\beta_1 = 0.5$, all $\gamma = \delta = 0$.

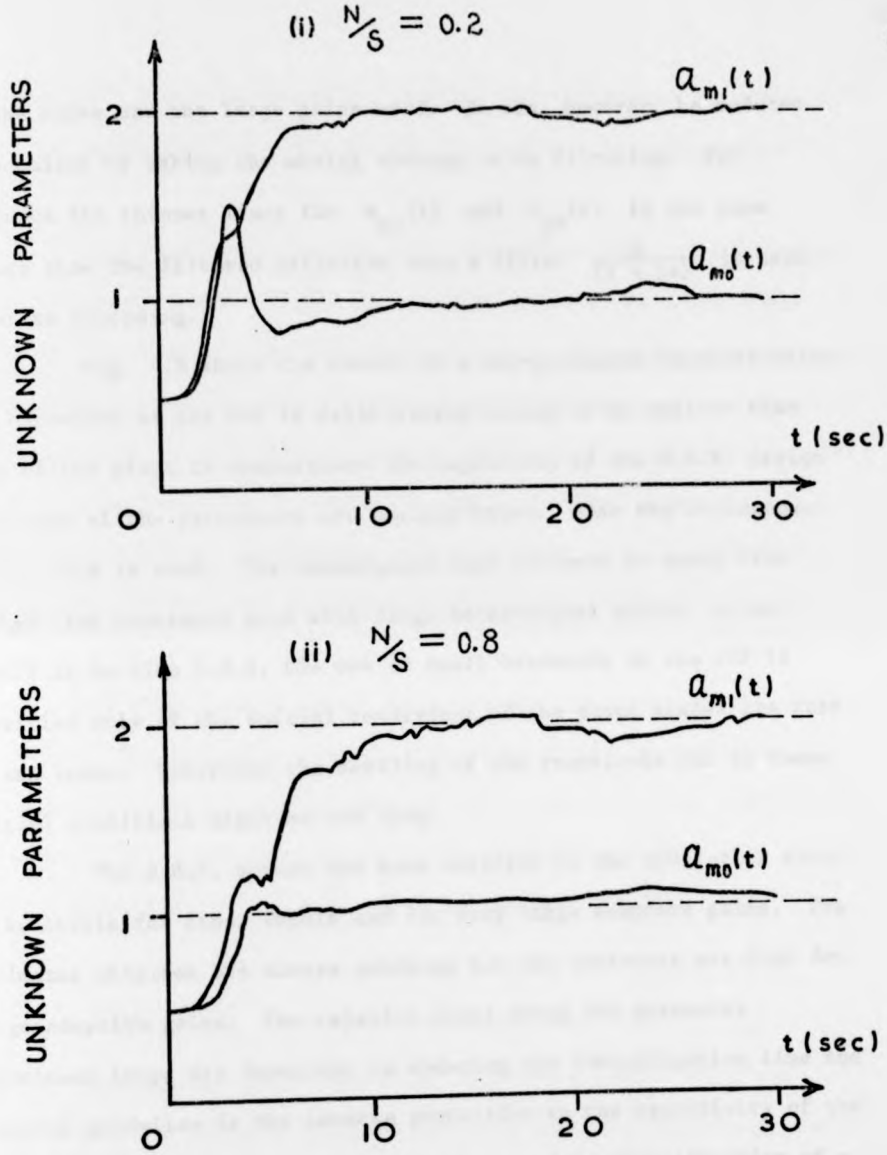

Fig. 4.8 Identification results for a linear system.

plant TF = $1/(s^2 + a_1 s + a_0)$; input = sin(t).

- - - for true values; $Z_1(s)$ = 1/SVF = 1 + 2 s .

(i) $\alpha_1 = \alpha_0 = 10$; (ii) $\alpha_1 = \alpha_0 = 4$. All $\gamma = 0$.

by the noise and the large gains used. It can, however, be reduced if required by taking the moving average or by filtering. For instance the thinner lines for $a_{m1}(t)$ and $b_{m0}(t)$ in the same figure show the filtered estimates when a filter $\frac{1}{(1 + 5s)}$ is used prior to recording.

Fig. 4.8 shows the result of a two-parameter identification. The bandwidth of the SVF is deliberately chosen to be smaller than that of the plant to demonstrate the capability of the S.R.E. design when some of the parameters are assumed known. Also the arrangement of Fig. 4.6 is used. The convergence time achieved is about five system time constants even with large noise-signal ratio. As we recall in Section 4.2.4, the use of small bandwidth of the SVF is justified only if the initial conditions of the plant states are zero or are known. Otherwise the settling of the transients due to these initial conditions might be too long.

The S.R.E. method has been verified in the simulation study to be stable for other inputs and for very large adaptive gains. The estimates obtained are always unbiased but the variances are high for large adaptive gains. The relative gains among the parameter adjustment loops are important in reducing the identification time and a useful guideline is the inverse proportion to the sensitivity of the output to each parameter. Typically the complete identification of a four-parameter second order plant would take five to ten system time constants.

4.3. THE ADAPTIVE STATE OBSERVER

The well-known Luenberger observer [16] can determine the states of a completely known, time-invariant linear system. However, if some of the system parameters are unknown, the observer cannot be

implemented. For this reason an observer that adapts to the unknown plant parameters will greatly extend the range of existing control laws.

The first adaptive observer, for single-input single-output time-invariant linear system, was recently reported by Carroll and Lindorff [17]. The observer uses only the input and output data to yield simultaneous parameter and state estimates for a given canonical system structure. A different form of this adaptive observer was then considered by Luder and Narendra [18]. These adaptive observers, though guaranteed to be globally stable by means of the Liapunov design laws, suffer from a serious practical limitation in that the parameter estimates are asymptotically biased when noise is present at the plant output measurement, thus introducing errors in the state estimates. The following work is a development of a new adaptive state observer which aims to overcome this weakness of the contemporary observers. It is based on the parameter estimation scheme (the S.R.E. method) investigated in the previous section.

4.3.1. Development

The system is assumed to be completely controllable and observable. The proposed adaptive observer will identify the system parameters and states simultaneously according to the canonical form of equations (4.9) - (4.10). These state estimates can be directly used for computing control strategies or they can be first converted to those of a standard canonical form (the output or observable form) by means of an algebraic combination of the input and output state estimates [73]. The detail is shown in appendix (A.10). Other canonical forms can be obtained easily from the output form by means of a similarity transformation [73].

As shown in Fig. 4.9, the observer essentially consists of a parameter estimator designed by the S.R.E. method used in conjunction with the SVF. It is apparent that the model states $\underset{\sim}{y}_{mf}$ ($= [\Theta_{mf}\ \dot{\Theta}_{mf} \cdots \overset{(n-1)}{\Theta}_{mf}]^T$) is a filtered version of the actual state estimates since the input has been filtered by the SVF. To recover them, one just needs to process the $\underset{\sim}{y}_{mf}$ through an inversion of the SVF as indicated in the figure. The SVF is usually $\frac{1}{N_f(s)}$ where $N_f(s)$ has order equal to $(n-1)$. Hence the inversion for a second order system does not require any differentiation since Θ_{mf}, $\dot{\Theta}_{mf}$ and $\ddot{\Theta}_{mf}$ are obtainable directly from the model to implement $\hat{y}_1$ and $\hat{y}_2$:

$$\hat{y}_1 = \Theta_{mf} + T_f\,\dot{\Theta}_{mf}$$

$$\hat{y}_2 = \dot{\Theta}_{mf} + T_f\,\ddot{\Theta}_{mf}$$

where

$$N_f(s) = 1 + s\,T_f$$

For an n th order system, (n-2) differentiations of model states are required. This is of course feasible only if the model states are almost noise-free. From simulation experience, it is observed that when a moderate speed of parameter adjustments is used, the model states are quite clean. If a very fast speed of parameter adjustments is used, the model states will become more noisy. This point will be clarified by the example demonstrated in Section 4.3.2.

It should be pointed out that the observer dynamics are entirely dependent upon the parameter estimator. Hence it is globally stable and the response time can be readily controlled.

A comparison of the proposed adaptive observer with the contemporary adaptive observers is in order here. The main advantages of the proposed scheme are that the mean parameter and state estimates

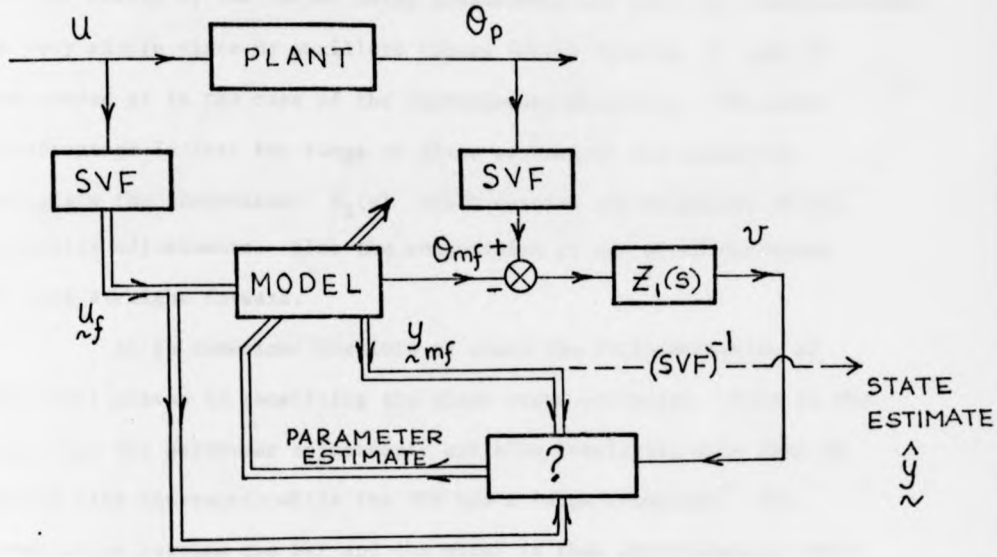

Fig. 4.9 An adaptive observer

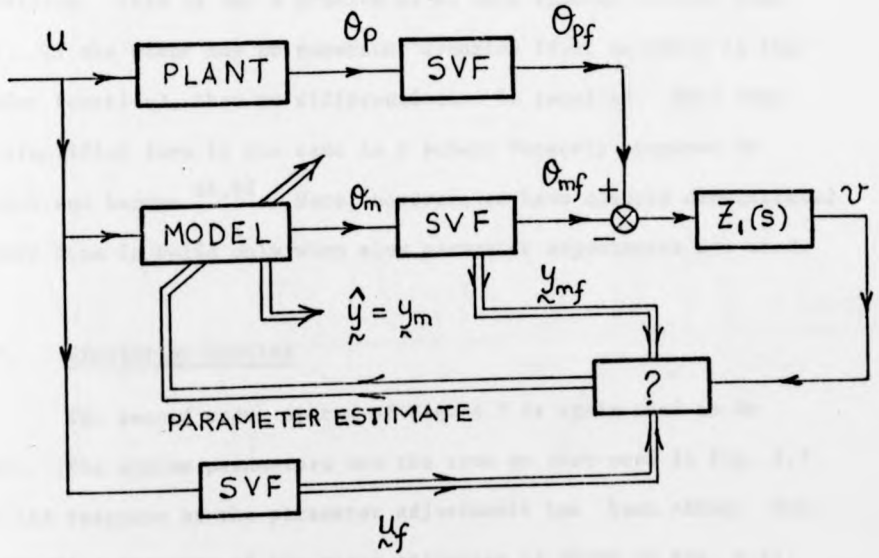

Fig. 4.10 A simplified adaptive observer

(for slow parameter adjustments)

are not biased by the output noisy measurement and that the implementation is very simple since no auxillary inputs (which involve $\dot{a}$ and $\dot{b}$) are needed as in the case of the contemporary observers. The main disadvantage is that the range of plant parameters are needed to calculate the compensator $Z_1(s)$ which assures the stability of the parameter adjustments. Also the computation of the state estimates is less straight forward.

It is sometimes possible to avoid the differentiation of the model states in generating the plant state estimates. This is the case when the parameter adjustments are slow (typically more than 50 system time constants) while the SVF has a large bandwidth. The commutation between the SVF and the model is then approximately valid and the resultant structure is shown in Fig. 4.10. The plant state estimates $\hat{\underset{\sim}{y}}$ are directly given by the model states $\underset{\sim}{y}_m$. The only differentiations involved are those required to generate the input derivatives. This is not a problem as we have assumed a noise free input. If the plant has no numerator dynamics (i.e. no zeros in the transfer function), then no differentiation is required. Note that this simplified form is the same as a scheme recently proposed by Courtiol and Landau [61,62]. Here, however, we have clearly demonstrated why this form is valid only when slow parameter adjustments are used.

4.3.2. Simulation Results

The second order system of Fig. 4.5 is again used as an example. The system parameters are the same as that used in Fig. 4.7 where the response of the parameter adjustments has been shown. The corresponding response of the state estimates is shown in Fig. 4.11. Note that the state estimates $(\hat{y}, \hat{\dot{y}})$ closely track that of the noisy plant state $(y_p + \text{noise})$ and the unmeasurable $\dot{y}_p$ after ten seconds

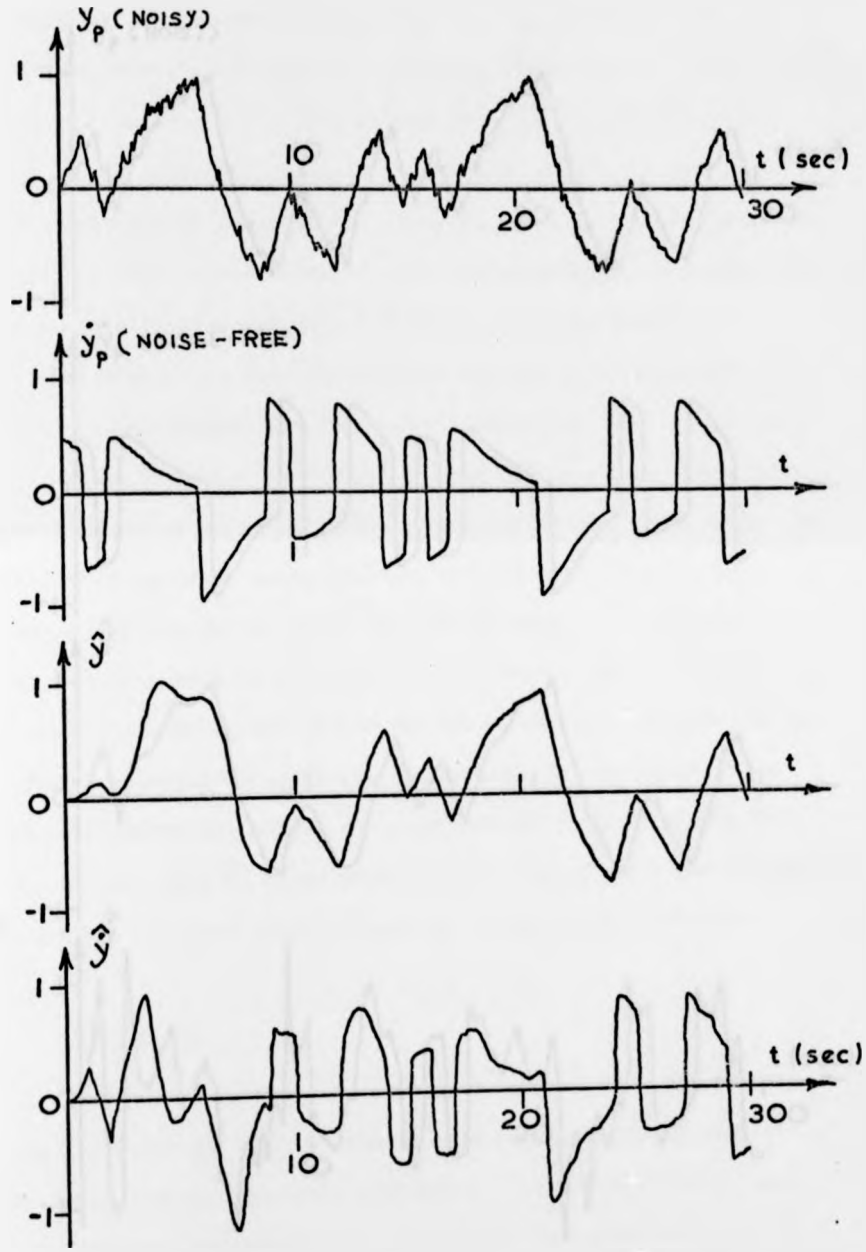

Fig. 4.11 State estimation of a linear system (same parameters as Fig. 4.7)

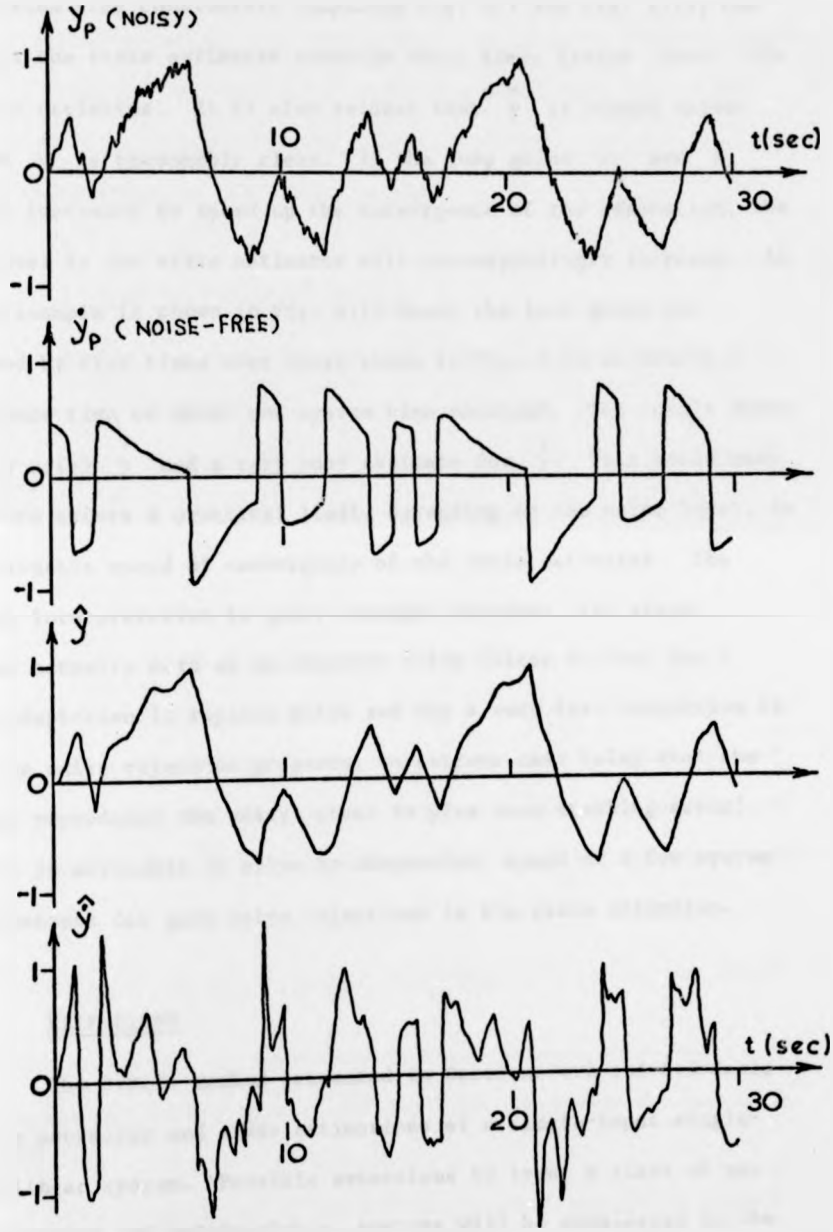

Fig. 4.12 State estimation of a linear system

(same parameters as Fig. 4.7 except that $\alpha_1 = 50$, $\alpha_0 = \beta_0 = 10$, $\beta_1 = 2.5$)

(≈ 5 system time constants); comparing Fig. 4.7 and Fig. 4.11, one sees that the state estimates converge three times faster than the parameter estimates. It is also evident that $\hat{y}$ is almost noise-free and $\dot{\hat{y}}$ is reasonably clean. If the loop gains α_j and β_j are much increased to speed up the convergence of the adaptation, the noise level in the state estimates will correspondingly increase. An extreme example is shown in Fig. 4.12 where the loop gains are increased by five times over those shown in Fig. 4.11 to obtain a convergence time of about one system time constant. The result shows a fairly noisy $\hat{y}$ and a very poor estimate for $\dot{\hat{y}}$. This would mean that there exists a practical limit, depending on the noise level, in the attainable speed of convergence of the state estimates. The physical interpretation is quite straight forward: the state observer actually acts as an adaptive noise filter in that for a slower adaptation it rejects noise and for a very fast adaptation it loses the noise rejection property; an extreme case being that the observer reproduces the noisy state to give zero tracking error! Hence it is advisable to allow an adaptation speed of a few system time constants for good noise rejections in the state estimates.

4.4. EXTENSIONS

The S.R.E. method presented in Sections 4.2 and 4.3 deals with the parameter and state estimations of a single-input single-output linear system. Possible extensions to treat a class of non-linear systems and multivariable systems will be considered in the following. While the application of the S.R.E. method (using Liapunov or hyperstability approach) to nonlinear systems has not been considered by other authors, the design for multivariable systems given by Landau [51] requires the state vector measurement. Here we shall

assume that only the inputs and outputs are available and the aim is to obtain stable design laws without the need of pure differentiations. Only the parameter estimations will be discussed since the state estimations are straight forward matters once the parameter estimation system is designed by the S.R.E. method.

4.4.1. A Class of Nonlinear Plants

Consider a plant consisting of a stable linear section with a nonlinear feedback section. The state equation is:

$$\dot{\underset{\sim}{y}}_p = A_p \underset{\sim}{y}_p + B_p \underset{\sim}{u} + B'_p \underset{\sim}{g} (\underset{\sim}{y}_p) \tag{4.27}$$

$$\Theta_p = C_1 \underset{\sim}{y}_p \tag{4.28}$$

The $\underset{\sim}{y}$, $\underset{\sim}{u}$, $\underset{\sim}{g}$ and the A, B, C, are all expressed in the special forms of equations (4.9) and (4.10). The elements of $\underset{\sim}{g} (\underset{\sim}{y}_p)$ represent single-valued nonlinear functions of $\underset{\sim}{y}_p$; the forms of the nonlinearities are assumed known. Now if the input and output are processed by state variable filters which are chosen to approximate transportation lags [42], the commutation of linear and nonlinear terms will give:

$$\dot{\underset{\sim}{y}}_{pf} = A_p \underset{\sim}{y}_{pf} + B_p \underset{\sim}{u}_f + B'_p \underset{\sim}{g} (\underset{\sim}{y}_{pf}) \tag{4.29}$$

where the subscript 'f' represents filtered values. The design of the transportation-lag-type of SVF has been considered in detail by Khor [42].

The formulation of the problem so that the S.R.E. method is applicable is to treat the nonlinear terms as additional inputs to the estimation model. Hence the model has the following state equation.

$$\dot{\underset{\sim}{y}}_{mf} = A_m \underset{\sim}{y}_{mf} + B_m \underset{\sim}{u}_f + B'_m \underset{\sim}{g} (\underset{\sim}{y}_{pf}) \tag{4.30}$$

The block diagram of the overall structure is shown in Fig. 4.13. Note that the series compensator is still linear and is given by

$$v_{f1} = F\, \underset{\sim}{e}_f \quad \text{or} \quad v_{f1}(s) = Z_1(s)\, e_{f1}(s)$$

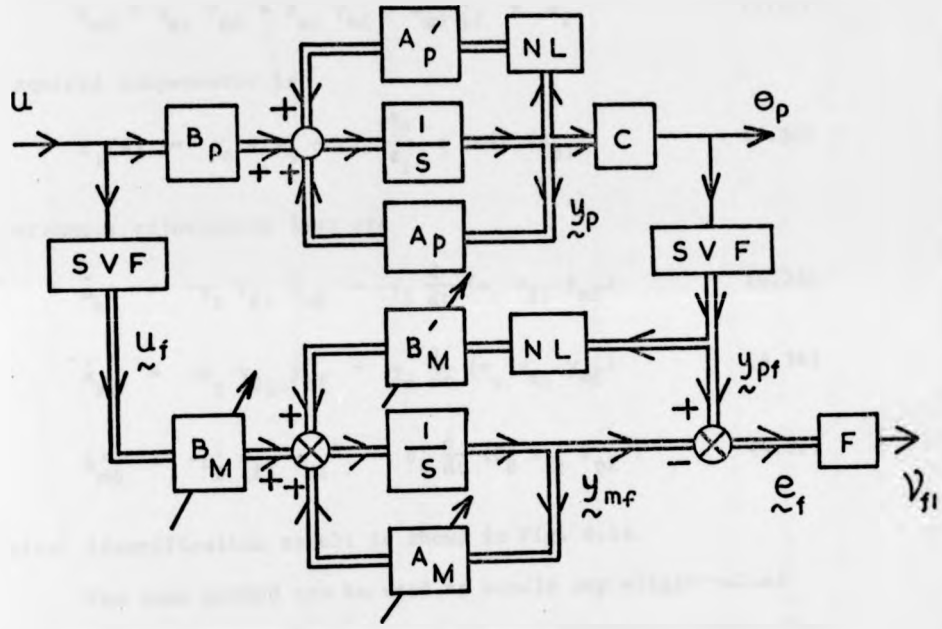

Fig. 4.13

Now applying the results of Section 4.2 we obtain the following conditions for hyperstability:

1) A_p is a stable matrix;

2) $\dfrac{Z_1(s)}{D_p(s)}$ is positive real, where $D_p(s)$ is the denominator of the transfer function of the linear section;

3) Parameter adjustment laws are given by equations (4.22), (4.23) plus the following:

$$\dot{b}'_{mj} = -\beta'_j\, v_{f1}\, g_j\, (\underset{\sim}{y}_{pf}) - \delta'_j \frac{d}{dt}\left[\beta'_j\, v_{f1}\, g_j\, (\underset{\sim}{y}_{pf})\right] \qquad (4.31)$$

As an example consider a linear servo with a component having a "hard spring" characteristic:

$$\ddot{y}_p + a_{p1}\,\dot{y}_p + (a_{p0} + b'_p\; y_p{}^2)\; y_p \;=\; u \tag{4.32}$$

The adjustable model used is

$$\ddot{y}_{mf} + a_{m1}\,\dot{y}_{mf} + a_{m0}\; y_{mf} + b'_{m0} y^3_{pf} \;=\; u_f \tag{4.33}$$

The required compensator is

$$Z_1(s) \;=\; z_0 + z_1\, s\;, \quad \frac{z_0}{z_1} \leq \min\,(a_{p1}) \tag{4.34}$$

The parameter adjustments laws are

$$\dot{a}_{m1} \;=\; -\alpha_1\, v_{f1}\, \dot{y}_{mf} \;-\; \gamma_1 \frac{d}{dt}\,(\alpha_1\, v_{f1}\, \dot{y}_{mf}) \tag{4.35}$$

$$\dot{a}_{m0} \;=\; -\alpha_0\, v_{f1}\, y_{mf} \;-\; \gamma_0 \frac{d}{dt}\,(\alpha_0\, v_{f1}\, y_{mf}) \tag{4.36}$$

$$\dot{b}'_{m0} \;=\; -\beta'_0\, v_{f1}\, y_{pf}{}^3 \;-\; \delta'_0 \frac{d}{dt}\,(\beta'_0\, v_{f1}\, y_{pf}{}^3) \tag{4.37}$$

A typical identification result is shown in Fig. 4.14.

The same method can be used to handle any single-valued nonlinearity which exists in the input or as a function of both the input and output. The disadvantage of this approach is that the estimates b'_{mj} will be asymptotically biased when the noise at the plant output is significant. Replacing $\underset{\sim}{g}\,(\underset{\sim}{y}_{pf})$ in equation (4.30) by $\underset{\sim}{g}\,(\underset{\sim}{y}_{mf})$, that is to say changing the input to the nonlinearity of the model (see Fig. 4.13) from $\underset{\sim}{y}_{pf}$ to $\underset{\sim}{y}_{mf}$, will remove the bias at the expense of losing the global stability assurance. Here still the advantage over the G.E.E. - IV method (appendix A.9) is in the economy since no extra instrumentation is needed to generate the IV signals $(\underset{\sim}{y}_{mf})$.

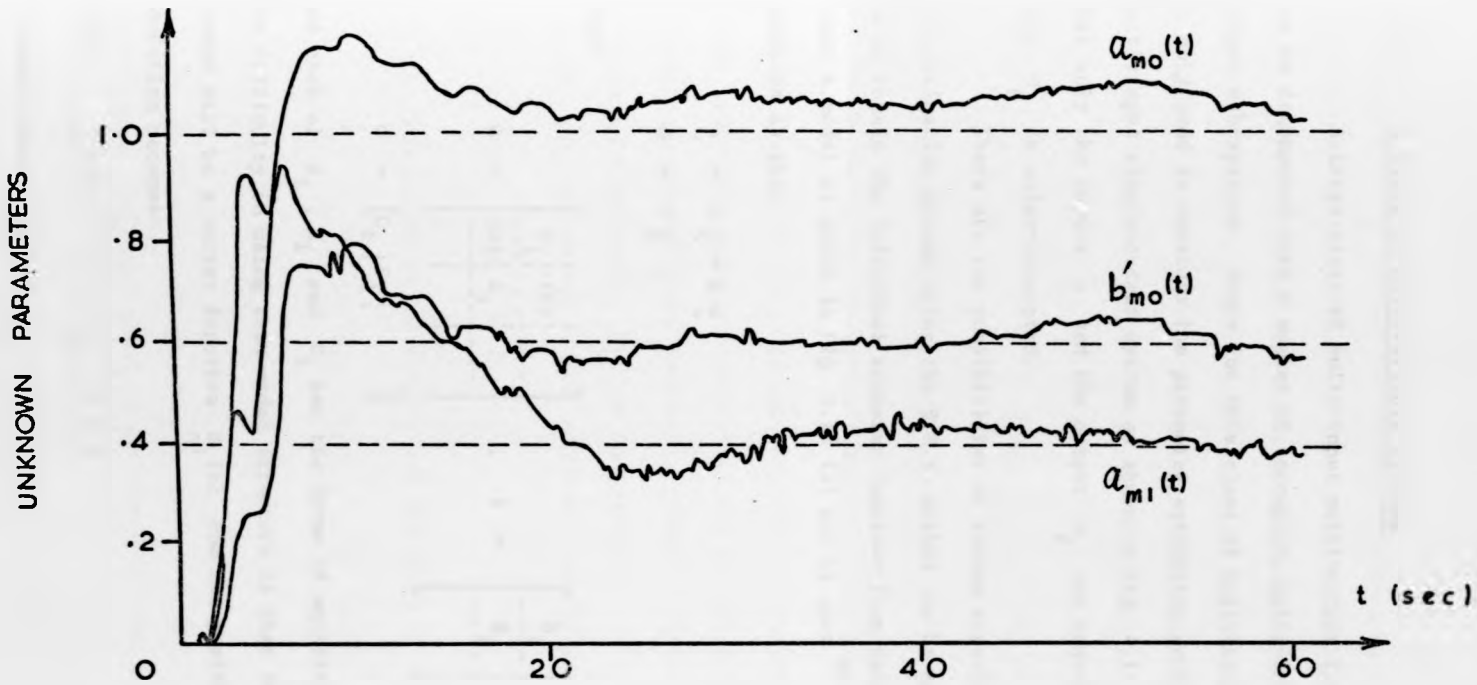

Fig. 4.14 Identification results for a nonlinear system. $(\ddot{y}_p + a_{p1}\,\dot{y}_p + a_{p0}\,y_p + b'_{p0}\,y_p^{\,3} = u)$

input = SIN(t); Noise/signal = 0.1; --- for true values.

$T_f = 0.25$, $Z_1(s) = 0.2 + s$, $\alpha_1 = \alpha_0 = \beta'_0 = 0.2$, $\gamma_1 = 0.2$, $\gamma_0 = \delta'_0 = 0.1$.

4.4.1. A Class of Multivariable Systems

A large class of multi-input multi-output linear systems can be decomposed into a number of uncoupled, multi-input single-output sub-systems. Hence for this class of multivariable systems we only need to consider the parameter estimation problem for a multi-input single-output system as shwon in Fig. 4.15. We assume that only the inputs $\underset{\sim}{u}$ and the output Θ_p are measurable and that only Θ_p is noise-corrupted.

There are two possibilities of system structure for which the estimation scheme using the S.R.E. method can be applied. One is to retain the individual transfer function from each input and hence a model as shown in Fig. 4.16 (a) can be used [62,63]. The state equation is then

$$\begin{aligned} \dot{\underset{\sim}{y}} &= A\,\underset{\sim}{y} + B\,\underset{\sim}{u} \\ \Theta &= C\,\underset{\sim}{y} \end{aligned} \tag{4.38}$$

where

$$A = \left[\begin{array}{c|c} A_1 & (0) \\ \hline (0) & A_2 \end{array}\right], \quad B = \left[\begin{array}{c} B_1 \\ \hline B_2 \end{array}\right]$$

$$C = \left[\begin{array}{c|c|c} C_1 & C_1 & \end{array}\right]$$

and each of A_i , B_i and C_1 has the forms of equation (4.10) . The difficulty in using this model structure is that the compensator needed will be a vector function $\underset{\sim}{Z}_1(s)$ and the positive real condition becomes:

$$\text{Real} \quad \underset{\sim}{Z}_1(s)\, C^T\, (sI - A_p)^{-1}\, G \geq 0 \tag{4.39}$$

It can be shown that

$$C^T\, (sI - A_p)^{-1}\, G = \left[\frac{1}{D_{1p}(s)} \quad \frac{1}{D_{2p}(s)} \quad \cdots \quad \frac{1}{D_{kp}(s)}\right] \tag{4.40}$$

Hence a suitable $Z_1(s)$ may not exist; it is also very difficult to determine, even if it exists.

The other possibility uses a model as shown in Fig. 4.16 (b). First we introduce $D_p(s)$ which is the least common denominator of the elements of the transfer function matrix relating the inputs to the output. The polynomials $D_p(s)$ and $N'_{ip}(s)$ are then given by

$$\theta_p = \sum_{i=1}^{k} \frac{N_{ip}(s)}{D_{ip}(s)} u_i(s) = \frac{1}{D_p(s)} \sum_{i=1}^{k} N'_{ip}(s)\, u_i(s) \tag{4.41}$$

The corresponding model is given by

$$\theta_m = \frac{1}{D_m(s)} \sum_{i=1}^{k} N'_{im}(s)\, u_i(s) \tag{4.42}$$

The incorporation of the state variable filters presents no problem in that the plant output and each input are processed by identical filters before entering the estimation system as shown in Fig. 4.15. The hyperstability design laws can be stated as:

(1) The compensator $Z_1(s)$ which is a scalar is designed so that

$$\text{Real} \quad \frac{Z_1(s)}{D_p(s)} \geq 0 \tag{4.43}$$

(2) The parameter adjustment laws are given by

$$\dot{a}_{pj} = -\alpha_j\, v_{f1}\, y_{mfj} - \gamma_j \frac{d}{dt} (\alpha_j\, v_{f1}\, y_{mfj}) \tag{4.44}$$

$$\dot{b}'_{ipj} = \beta'_{ij}\, v_{f1}\, u_{ij} + \delta'_{ij} \frac{d}{dt} (\beta'_{ij}\, v_{f1}\, u_{ij}) \tag{4.45}$$

Although the dimension of $D_p(s)$ is generally higher than the individual $D_{ip}(s)$, this model is preferable to that of Fig. 4.16 (a) because the design of the compensator $Z_1(s)$ is much simpler. It is thought that this model is suitable for the identification of approximated (reduced) models of multivariable systems which is very popular currently [76,77].

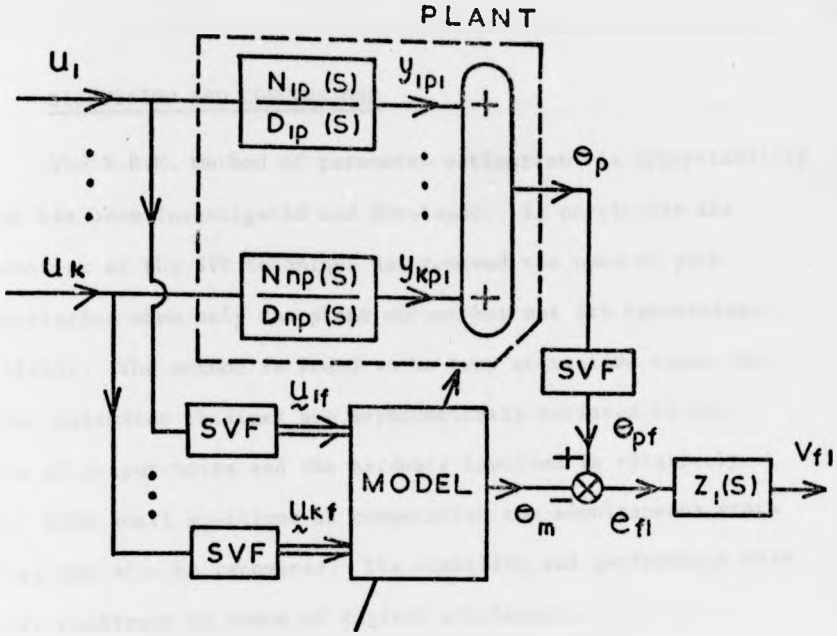

Fig. 4.15 Identification scheme for multivariable systems

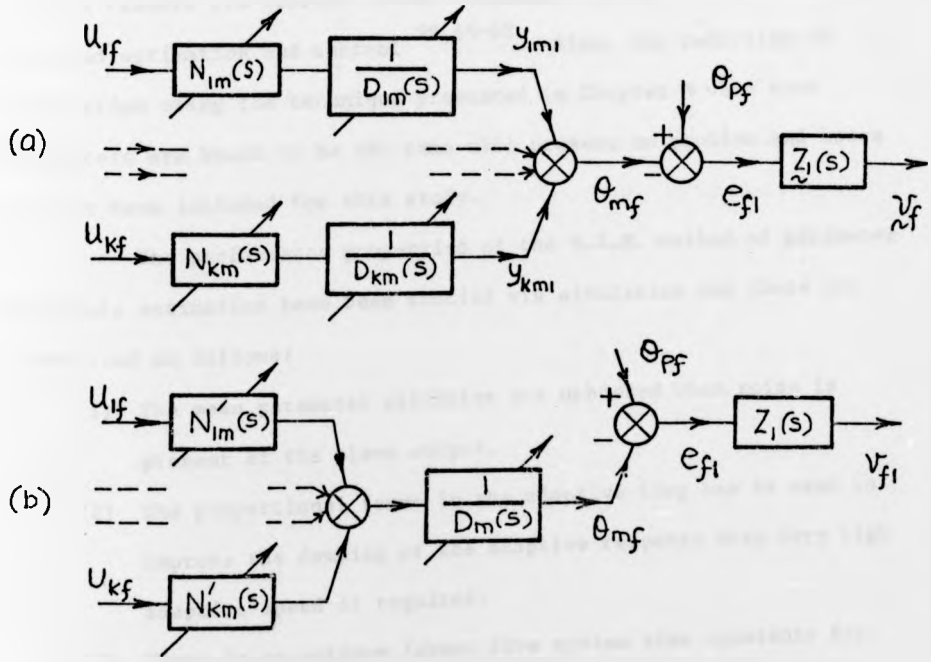

Fig. 4.16 Model structures for multivariable systems

4.5. DISCUSSION AND CONCLUSIONS

The S.R.E. method of parameter estimation via hyperstability theories has been investigated and developed. In particular the incorporation of the SVF technique has removed the need of pure differentiation when only the plant output but not its derivatives is available. The method is found to be very attractive since the parameter estimates obtained are asymptotically unbiased in the presence of output noise and the hardware involved is relatively little. With small additions of computation the simultaneous state estimates can also be recovered. The stability and performance have also been confirmed by means of digital simulation.

The computation of actual adaptive control using the parameter and state estimates is not considered in this investigation and the readers are refered to the literature on the technique of combined estimation and control [28,65-68]. Also, the reduction of computation using the technique presented in Chapter 3 when some parameters are known to be the same will present no problem and hence has not been included for this study.

The performance properties of the S.R.E. method of parameter and state estimation have been studied via simulation and these are summarised as follows:

(1) The mean parameter estimates are unbiased when noise is present at the plant output.

(2) The proportional terms in the adaptive loop can be used to improve the damping of the adaptive response when very high adaptive speed is required.

(3) There is an optimum (about five system time constants for a second order plant) in the convergence rate of the parameter estimates, probably due to the interaction of

simultaneous parameter adjustments. There is, however, no such limit to the convergence of the state estimates.

(4) When there is no noise, the proportional terms do not improve the convergence of the parameter estimate but improve that of the state estimate. For noisy measurements, the proportional terms may improve the parameter estimates by rejecting any bias in the noise and any d.c. offsets in the measurement.

(5) Even without the proportional terms, the state estimates converge much faster than the parameter estimates.

(6) For state estimations, good results are obtained by a compromise between desired convergence speed and acceptable noise level in the estimates.

Some similar observations to the above have been reported recently for discrete system identifications using the S.R.E. method [74,75].

Finally the extensions to treat nonlinear systems and multivariable systems have been carried out. These extensions have been found to be fairly easy once the proper model structure is found.

CHAPTER 5 - AN APPLICATION CASE STUDY

5.1. INTRODUCTION

The theory of M.R.A.C. system design using the Liapunov or hyperstability approach has received much attention of the control engineers since 1965. However the realization of this theory on real physical problems has been reported only very recently. Porter and Tatnall [78] were the first to investigate the performance of a M.R.A.C. controller for a hydraulic servomechanism. Sinner [79] then considered the adaptive identification and control of a heat exchanger and of a d.c. motor driving a variable load. More recently Bethoux and Courtiol [80] applied the hyperstability discrete model following system design to a heat exchanger while Hirsch and Peltie [74] tested a discrete hyperstable identification algorithm on the same system. All these efforts have shown the feasibility of using the stable adaptive design method in practice.

In the previous chapters we have considered some analysis and development of the design of M.R.A.C. and Identification systems with examples simulated on the digital computer. While the effect of noise has been investigated in these simulations, other aspects of physical problems such as nonlinearity and different order of the plant and model transfer functions, have not been studied. In the following, we shall investigate the application of the identification scheme developed in Chapter 4 to the on-line modelling of an Internal Combustion (I.C.) engine. The linearised engine dynamics about a set point can be represented by a third order system but with a first order mode dominant. We shall investigate the possibility of using a first order system to model the engine dynamics. First the S.R.E. design method is used to obtain the stable parameter adjustment laws. Later

on some experiments are repeated with the G.E.E. method to compare the performance of these two designs. Only the modelling aspect is studied; the dynamic feedback control using the estimation results is not considered. The effects of possible nonlinear response and neglected high order modes of the plant on the performance of the estimation scheme will be specifically pointed out. Hitherto such effects have not been reported by other authors.

5.2. A BRIEF DESCRIPTION OF THE SYSTEM AND THE EXPERIMENTS

5.2.1. The Engine

The I.C. engine is a 1725 c.c. petrol engine which is coupled to an eddy current dynamometer [81,82]. The power absorption of the dynamometer is controlled by adjusting the field excitation current. The entire system has been instrumented to serve as a laboratory rig for studies in the automation of engine testing. The block diagram of the particular section of the engine that we shall study is shown in Fig. 5.1.

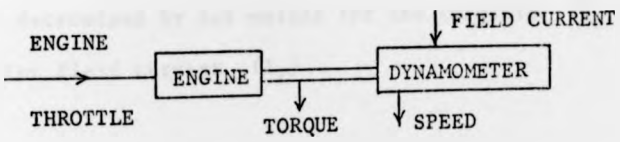

Fig. 5.1.

The measurements of the throttle angle, field current, engine speed and torque are available. The system dynamics that we are interested to model is the small signal linearized transfer function from the throttle to the speed for a fixed value of the torque.

Some a priori information on the system dynamics have been found by past students working on engine instrumentations [81,82]. The steady state torque-speed characteristics for different throttle angles are shown here in Fig. 5.2 (a). Also shown is the load-speed characteristic for a fixed dynamometer field-current. From this figure it is seen that the engine dynamics are highly nonlinear. Consequently a linearized small signal model will assume different parameters as the operating point changes. The frequency response of the speed-throttle section for an operating point in the middle of the torque and speed ranges is shown in Fig. 5.2 (b). Clearly it has a first order dominant mode with a second order resonance nearly two decades from it. Hence we shall approximate the engine by a first order model of the following form:

$$\frac{\Delta \text{ speed } (v)}{\Delta \text{ throttle } (\Theta)} = \frac{K_m}{s + \omega_m} \tag{5.1}$$

The estimation problem can now be stated as the design of globally stable adjustment laws to adjust K_m and ω_m continuously to track the engine parameters as the operating point changes. The operating point is determined by set points for the throttle (Θ_0) and for the dynamometer field current (I_f).

5.2.2. The Experimental Setup

The experiments involve two stages. First a perturbation signal (sine wave or square wave) is added to the throttle servo input and the corresponding changes in the engine speed are recorded. The recordings of all analogue signals are done by the multi-channel Philip's Analogue 7 Recorder. The next step is to play back the recordings through Analogue/Digital converters to obtain digital forms

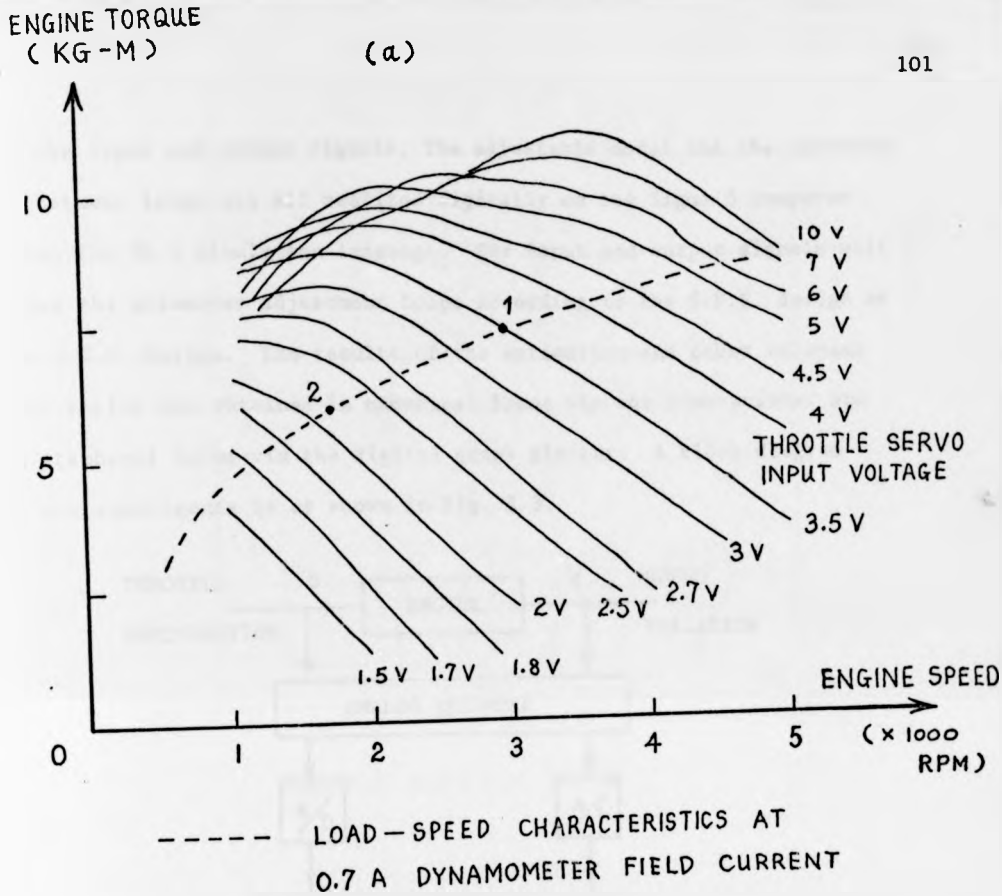

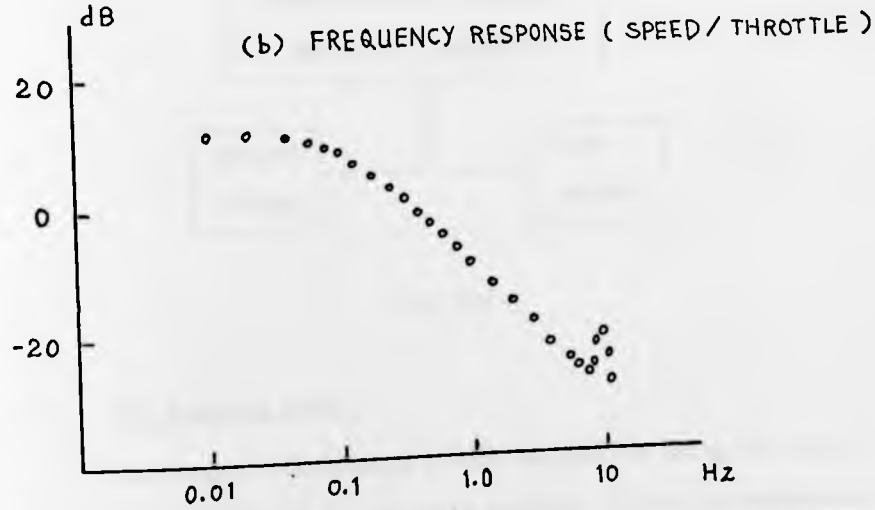

Fig. 5.2 Steady-state engine characteristics

(after Monk and Comfort [81,82])

of the input and output signals. The adjustable model and the parameter adjustment loops are all realized digitally on the Sigma 5 computer using the SL 1 simulation language. The input and output signals will drive the parameter adjustment loops according to the S.R.E. design or the G.E.E. design. The results of the estimation and other relevant time series are obtained in numerical forms via the line-printer and in graphical forms via the digital graph plotter. A block diagram of the experiments is as shown in Fig. 5.3.

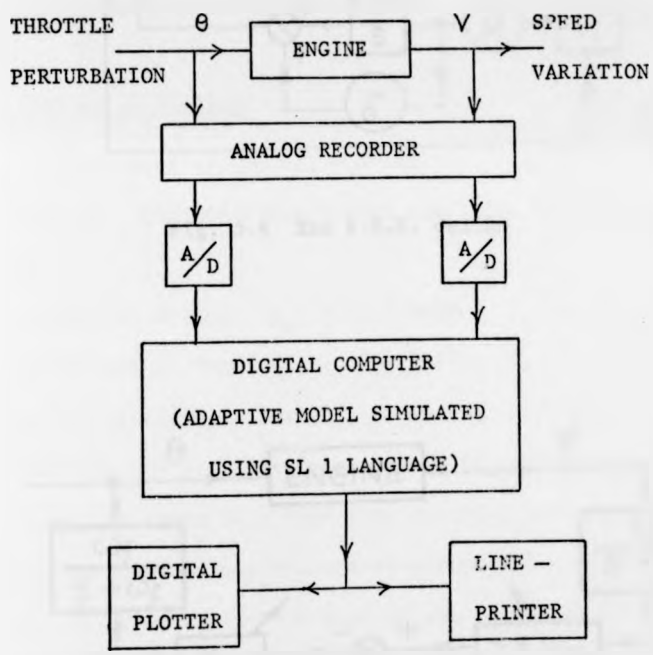

Fig. 5.3.

5.2.3. The Adaptive Models

The complete estimation scheme designed by using the S.R.E. method is shown in Fig. 5.4. No state variable filters are needed as the model is of first order. Hence the model ouptut V_m directly gives a noise-free estimate of the engine output V.

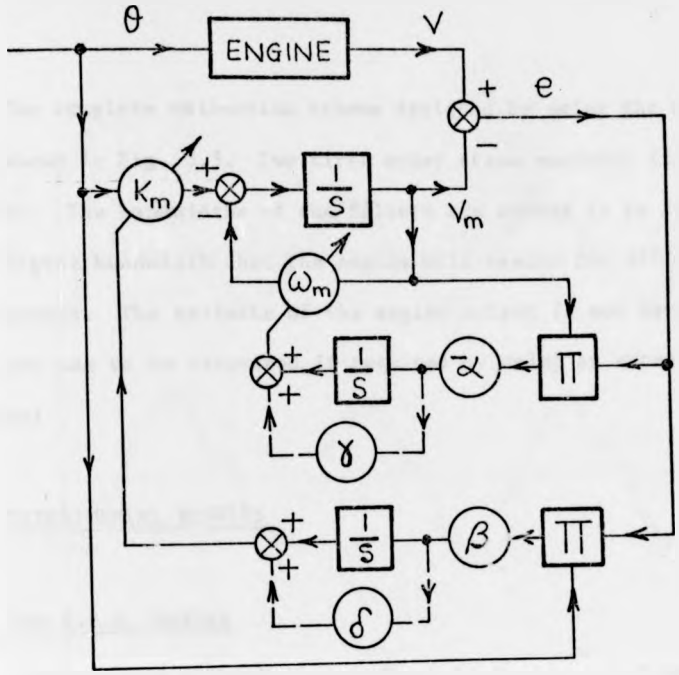

Fig. 5.4 The S.R.E. design

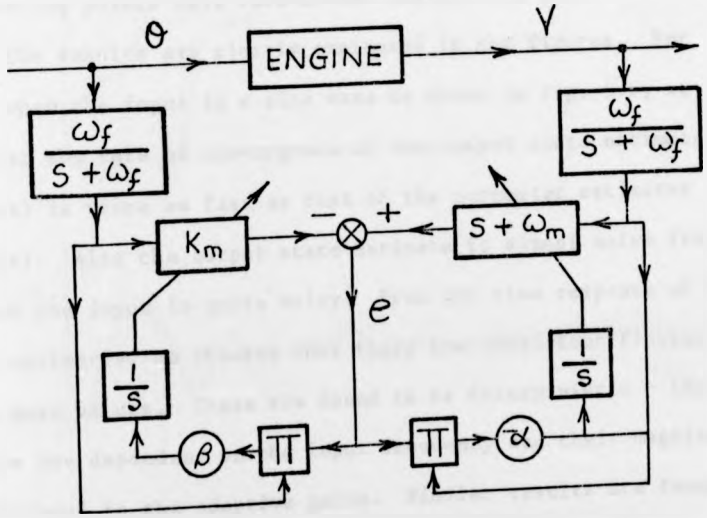

Fig. 5.5 The G.E.E. design

The complete estimation scheme designed by using the G.E.E. method is shown in Fig. 5.5. Two first order state variable filters are required. The bandwidths of the filters are chosen to be larger than the largest bandwidth that the engine will assume for different operating points. The estimate of the engine output is not directly available and has to be recovered if required by using an extra time-varying model.

5.3. EXPERIMENTAL RESULTS

5.3.1. The S.R.E. Design

Several sets of typical experimental results are shown in Fig. 5.6 to 5.10. Two operating points have been defined for convenience:

condition 1 when Θ_0 = 3.5 Volts, I_f = 0.7 Amps;

condition 2 when Θ_0 = 2.2 Volts, I_f = 0.7 Amps.

These operating points have been marked on Fig. 5.2 (b).

The results are clearly expressed in the figures. For instance, when the input is a sine wave as shown in Fig. 5.6, we observe that the rate of convergence of the output state estimate (15 seconds) is twice as fast as that of the parameter estimates (30 seconds). Also the output state estimate is almost noise free even though the input is quite noisy. From the time response of the parameter estimates, we observe that there are consistent fluctuations about the mean values. These are found to be deterministic - their frequencies are dependent on the input frequency and their magnitudes are proportional to the adaptive gains. Similar results are found when the input is a square wave as shown in Fig. 5.7. The convergence rate is faster than that with sine wave input. One important observation here is that the response is nonlinear - the response in

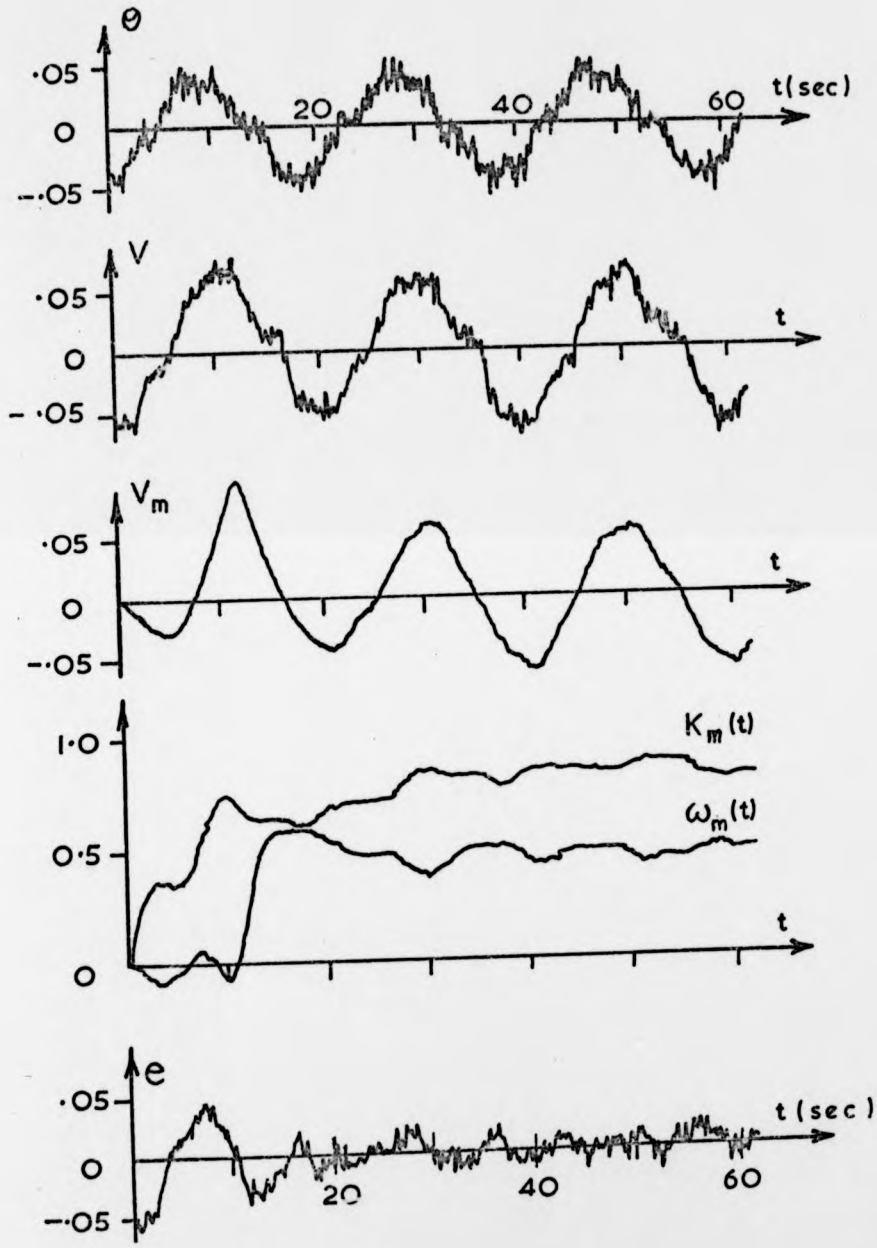

Fig. 5.6 Identification results with operating condition 1.

input: 0.05 C/S Sine wave.

adaptive gains: $\alpha = \beta = 80$, $\gamma = \delta = 0$.

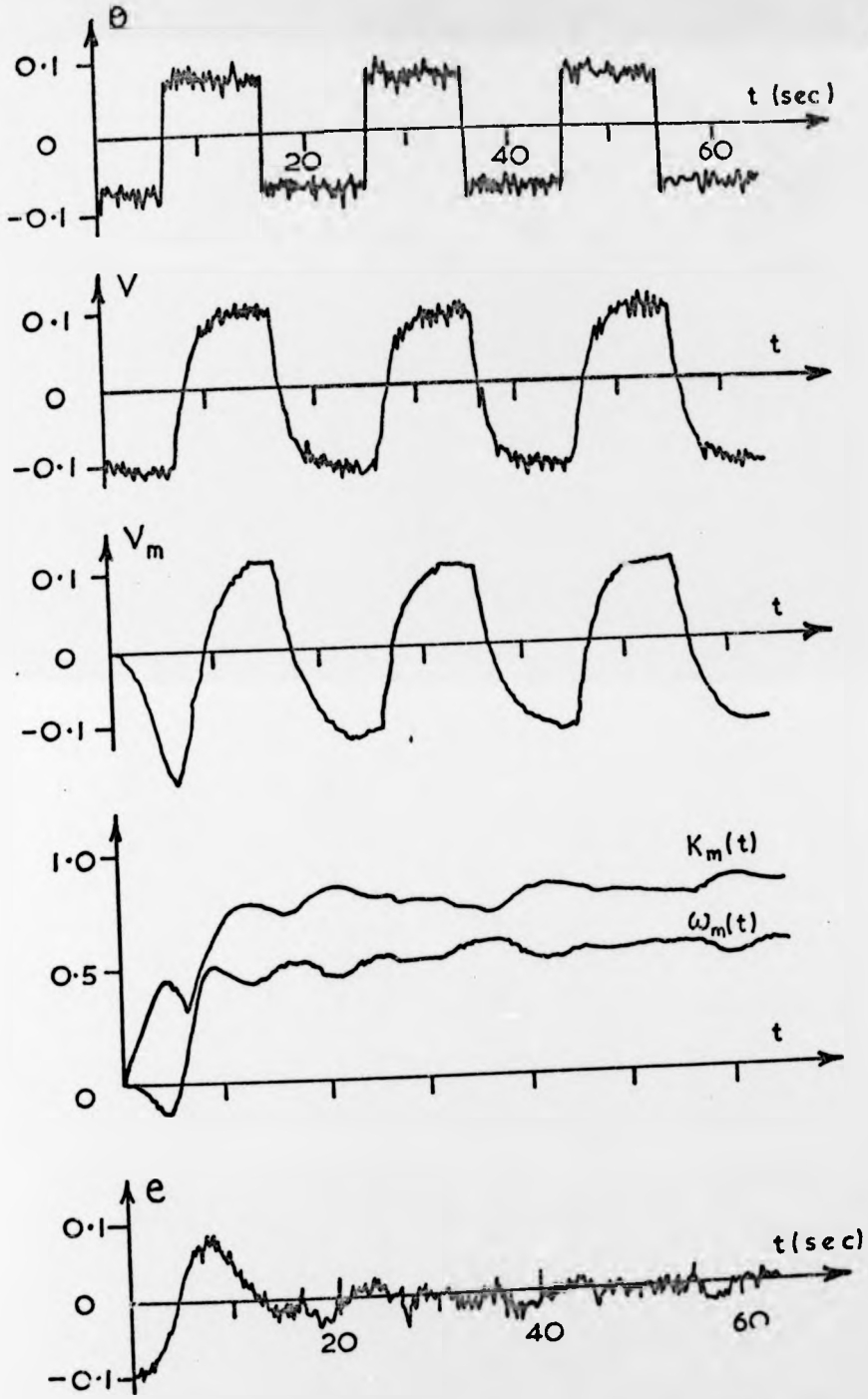

Fig. 5.7 Identification results with operating condition 1.

input: 0.05 C/S square wave.

adaptive gains: $\alpha = \beta = 20$, $\gamma = \delta = 0$.

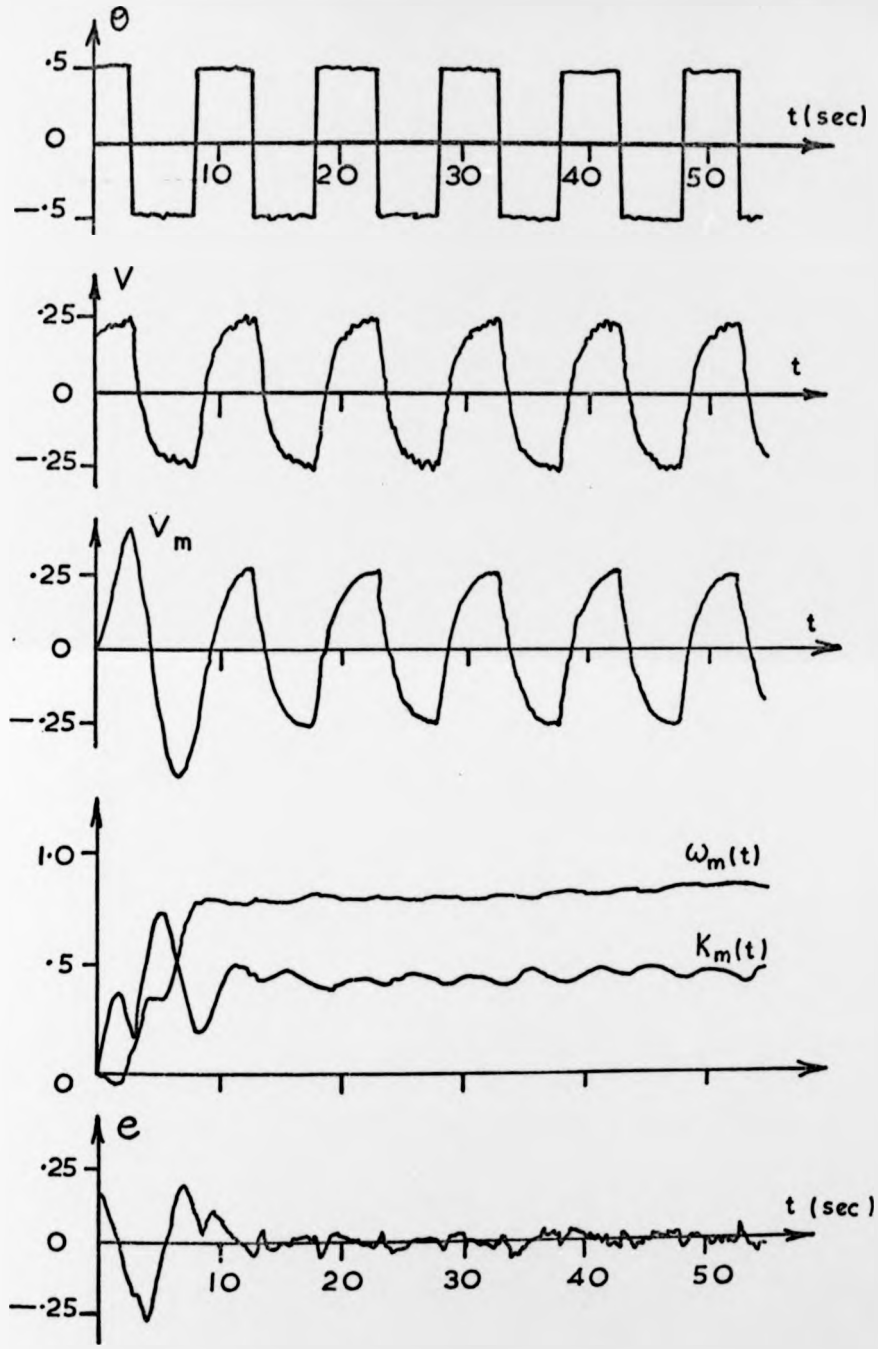

Fig. 5.8 Identification results with operating condition 2 .

input: 0.1 C/S square wave.

adaptive gains: $\alpha = \beta = 3$, $\gamma = \delta = 0$.

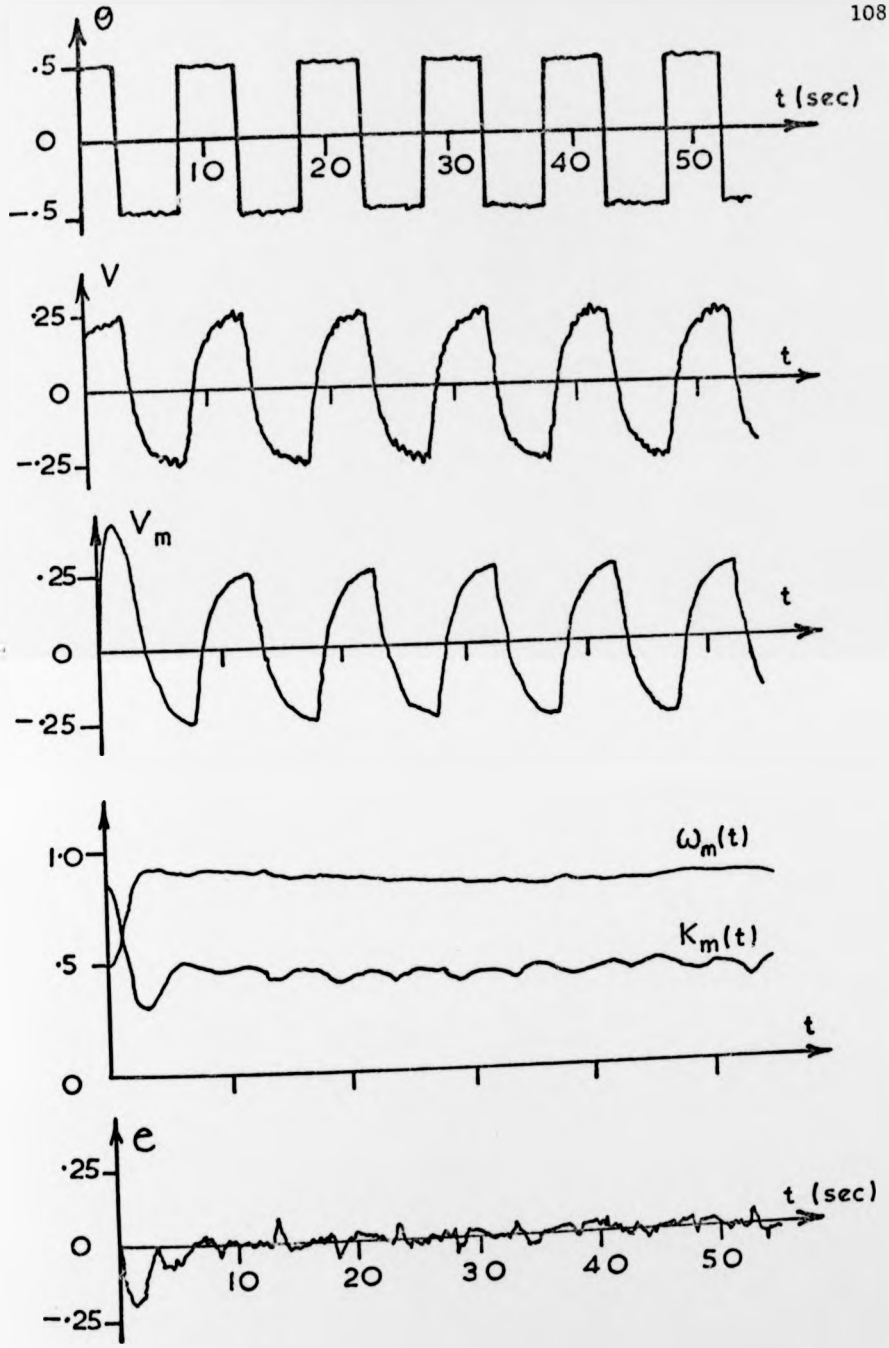

Fig. 5.9 Identification results with operating condition 2 - initial values estimated from condition 1.

input: 0.1 C/S square wave.

adaptive gains: $\alpha = \beta = 3$, $\gamma = \delta = 0$.

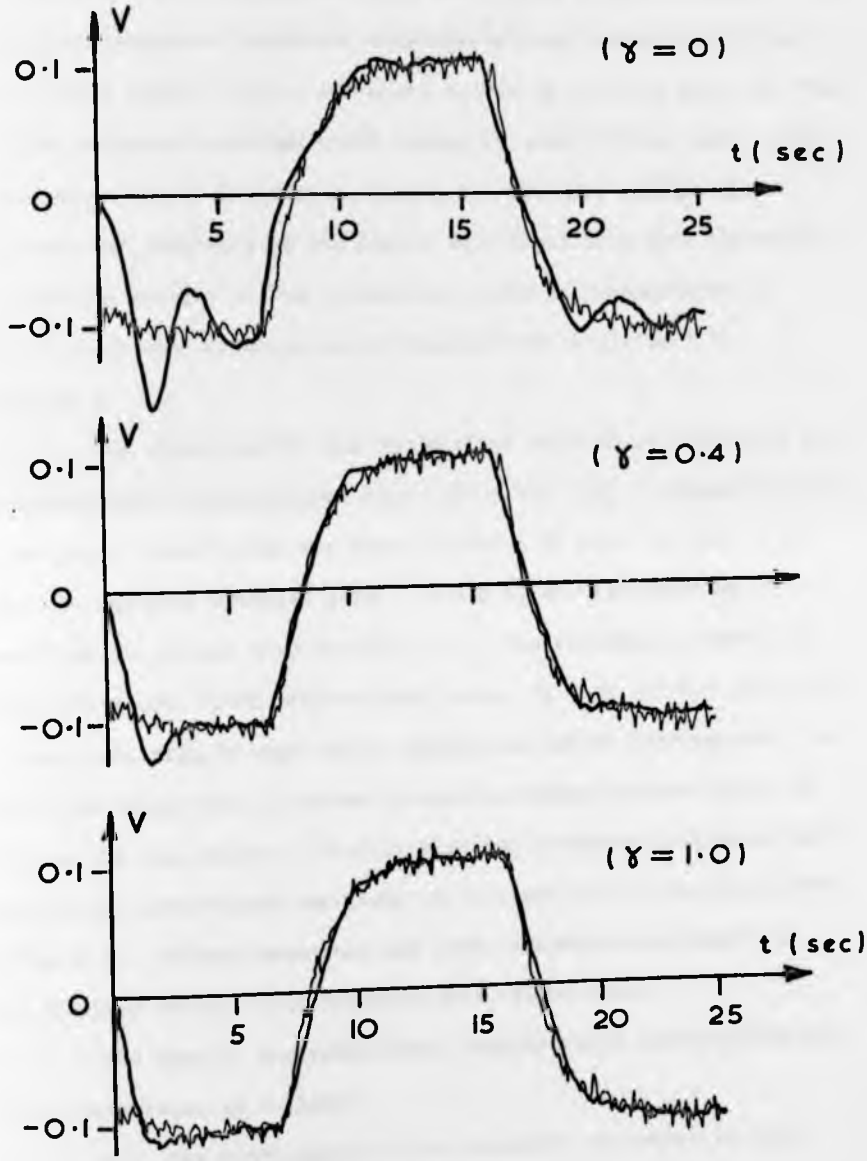

Fig. 5.10 Performance of state-tracking with different damping - operating condition 1.

adaptive gains: $\alpha = \beta = 200$.

——— model output; ——— actual output.

the positive cycle is different from that in the negative cycle. This directional dependent nonlinear response is less evident in the case of sine wave inputs. For a different operating point as shown in Fig. 5.8, the estimates obtained would change by about 100 per cent. The convergence rate is found to be faster (10 seconds) because the magnitude and frequency of the square wave input have been increased. The tracking ability of the estimation system is demonstrated in Fig. 5.9 with the operating point changed from condition 1 to condition 2.

The above results are for designs which do not make use of the proportional damping terms (i.e. all $\gamma = \delta = 0$). A demonstration of the use of these terms for state tracking is shown in Fig. 5.10. First the integral adaptive gains (α and β) are increased by 10 times from the values used for Fig. 5.7. The resultant response is very oscillatory. Then proportional gains ($\gamma = \delta$) of 0.4 and 1.0 are used resulting in much better damped and faster convergence. An expense of doing this is evident in the recording as more noise is contained in the estimate. Furthermore the parameter estimates (not shown) would have higher amplitude of fluctuations of the type shown in Fig. 5.7. If both parameter and state estimates are important, a compromised value of proportional gain can be used.

The results are summarised, together with some explanation of the phenomenon, as follows:

(1) The convergence of the parameter estimates is fast (five to ten system time constants). The convergence of the state estimate is at least twice as fast as that of the parameter estimates and can be further accelerated by employing the proportional damping terms.

(2) The adaptive estimation system is stable. The adaptive

gains are only limited by the variance (due to noise) and fluctuations (deterministic) of the parameter estimates.

(3) Deterministic fluctuations are present in the parameter estimates. The probable causes are (a) the directional dependent nonlinearity creates components of fluctuations having the same frequency as the input signal; (b) the neglected higher order modes of the plant would give additional transient error and hence create components of fluctuations having twice the frequency of the input signal; i.e. at the beginning and ending of each step change, the model parameters will assume a different value to minimize the state error.

5.3.2. The G.E.E. Design

Two sets of results for different operating points are shown in Fig. 5.11 and 5.12. Each of these figures consists of two sections showing the effect of different state variable filters. From these figures it is seen that there are large fluctuations in the steady state estimates and that the estimates are fairly noisy. Also for the same amount of fluctuations, the convergence rate is much slower than that of the S.R.E. method. The mean steady state parameter estimates are, however, only slightly different from those of the S.R.E. method.

There is no obvious explanation of why the fluctuations in the G.E.E. design are much larger than those in the S.R.E. design. The change in the bandwidth of the SVF does not affect much of the results. The causes of the fluctuations are again due to the non-linearity and neglected dynamics of the engine. These results

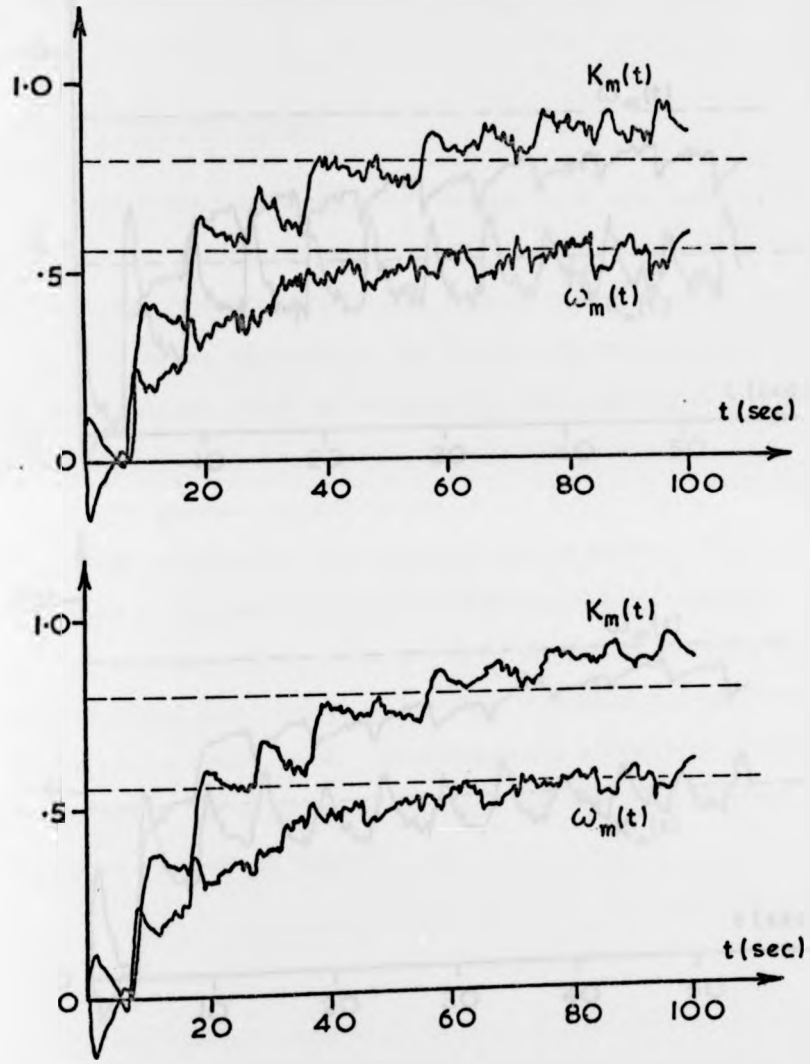

Fig. 5.11 Identification results with operating condition 1

– The G.E.E. design.

input: 0.05 C/S square wave. $\alpha = \beta = 50$.

SVF: (i) $5/(s + 5)$, (ii) $2/(s + 2)$.

---- mean values from the S.R.E. design.

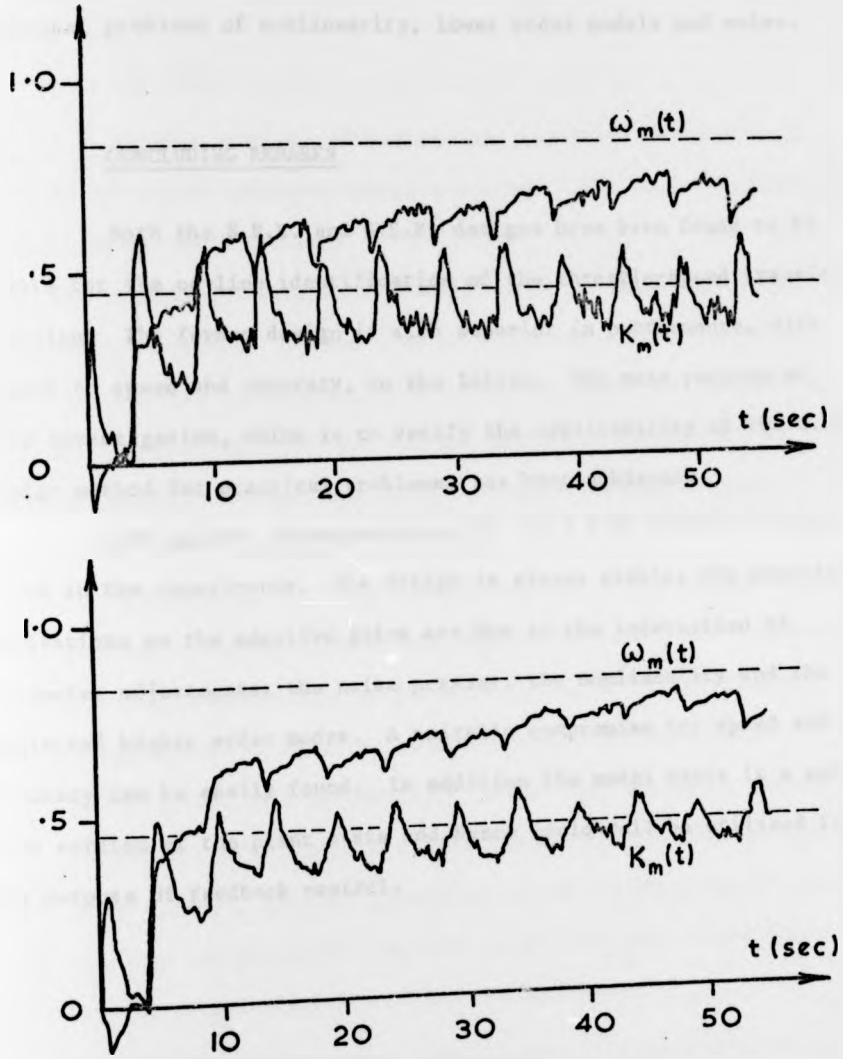

Fig. 5.12 Identification results with operating condition 2

– the G.E.E. design.

input: 0.1 C/S square wave. $\alpha = \beta = 20$.

SVF: (i) $5/(s + 5)$, (ii) $2/(s + 2)$.

---- mean values from the S.R.E. design.

therefore suggest that the G.E.E. design is more sensitive to the practical problems of nonlinearity, lower order models and noise.

5.4. CONCLUDING REMARKS

Both the S.R.E. and G.E.E. designs have been found to be stable for the on-line identification of the throttle-speed transfer function. The former design is also superior in performance, with regard to speed and accuracy, to the latter. The main purpose of this investigation, which is to verify the applicability of the S.R.E. design method for practical problems, has been achieved.

The general characteristics of the S.R.E. method have been noted in the experiments. The design is always stable; the practical limitations on the adaptive gains are due to the interaction of parameter adjustments, the noise present, the nonlinearity and the neglected higher order modes. A suitable compromise for speed and accuracy can be easily found. In addition the model state is a noise-free version of the plant state and hence could well be utilized for the purpose of feedback control.

CHAPTER 6 - FINDINGS AND FURTHER WORK

6.1. FINDINGS

In this thesis, new results are reported on the design methods for model reference adaptive systems. The main findings are summarised in the following:

- The comparative studies of design rules for model reference adaptive control systems have provided convincing proofs of the superior performance of the Liapunov synthesis to that of the gradient design. The dimensionless performance criteria for the gradient design, with both deterministic and stochastic inputs, are not a monotonic decreasing function of the dimensionless gain parameter; also the performance varies significantly with the frequency band of the input signal. On the other hand, the same dimensionless performance criteria for the Liapunov design always decrease monotonically with the increasing dimensionless gain parameter; it could also achieve a smaller performance criterion not attainable by the gradient design. For noisy systems, some modifications can be incorporated in the Liapunov design to achieve noise rejection and bounded-input bounded-output stability of the entire system.

- For multivariable systems, there exists already a general design algorithm based on Liapunov synthesis and in a state space representation. This algorithm is extended to include a wider class of plants, in which the adjustable parameter may appear simultaneously in two or more elements of the plant and control matrices. The resultant design is globally stable in the response error state space and the transient damping can be systematically adjusted, to achieve an acceptable performance, by varying the

proportional gains.

- The practical difficulty of implementing the stable model reference methods for on-line parameter and state estimation (the S.R.E. methods) is solved by using the state variable filters. In this technique, the input and output of the plant are filtered by identical low-pass filters before entering the parallel estimation model. The resultant scheme is characterised by unbiased estimates and fast convergence, and only the input and output measurements are needed. The main disadvantage is in the design of the series compensator; this requires a knowledge of the range of parameter variations and the satisfaction of a positive real condition over this range to give the compensator parameters which ensure the global stability of the parameter adjustments. The single-input single-output system has been treated in detail and the feasible extensions to treat nonlinear and multivariable systems have been pointed out.
- The S.R.E. method has been tested on a real physical system. The excellent results obtained demonstrate the practical feasibility of this design method. It has also been observed that the inherent nonlinear response of the plant and the neglected higher order dynamics introduce deterministic fluctuations in the parameter estimates. However a compromise between accuracy and speed of adjustments can be easily found. Also the S.R.E. design is found to be less sensitive to these practical phenomena than is the well-known G.E.E. design.

6.2. SUGGESTIONS FOR FURTHER WORK

The work carried out in this research and also recent work by other authors [60,79] have pointed out the feasibility and potential applications of model reference adaptive systems as synthesized by design methods based on stability theories. While more real case studies are desirable, further research on the reduction of computation and practical approximations are needed. The following topics are some areas which require urgent attention:

(1) The use of low order reference models for the adaptive control of high order plants is an important subject, since it will reduce the complexity (the numbers of state measurements and adjustable parameters) of the adaptive controller. Such a possibility has been demonstrated previously by Hsia [83] for M.R.A.C. systems designed by a gradient method; he uses the idea of approximating the model by a low order transfer function with a pure time lag. More recently Bethoux and Courtiol [80] have demonstrated the good performance of a hyperstable adaptive controller for a second order plant with a first order reference model. Further case studies using the currently available transfer function reduction technique [76,77] will give a general guideline to the designers regarding the practical (economical) aspect of implementation of this type of adaptive controller. The on-line identification of a low order (approximated) model of a high-order plant is a slightly different problem. A practical example has been demonstrated in Chapter 5 of this thesis and the effect of the neglected dynamics on the performance of the parameter adjustments has been pointed out. More examples, especially those of multivariable systems, will be suitable topics for further work.

(2) Landau [60] has considered the identification of a process with a pure time lag τ. He has given an approximate design rule

for simultaneously identifying τ and other parameters by using the S.R.E. method. While the design has been shown to work satisfactorily, the hardware realization of an adjustable time lag device is expensive. Inoue and Sugimoto [84] have also considered a similar problem but with a fixed time lag. They have shown that instability of parameter adjustments would result if the error in the assumed value of τ is too large. For many industrial processes, the value of τ is known and has only small variations; it will be beneficial to compare the performance of those identification schemes using a variable τ and those using a fixed τ.

(3) For the on-line identification of multivariable systems, we have suggested a particular form of the estimation model (equation 4.41) for the S.R.E. method in Chapter 4. While this form is very useful for single-output systems, it becomes less economical when more outputs or more states are available. Landau [60] has recently examined the use of a canonical form, proposed by Luenburger [85], which is very economical when several outputs are available. A performance study of the various canonical forms will be desirable.

(4) The on-line parameter and state estimation system designed by the S.R.E. method is guaranteed to be globally stable. However the overall system stability is not theoretically assured when the estimates are used to compute suitable adaptive controls, for instance in the case of an adaptive state regulator[28,79]. So far the experimental results [79] have been found satisfactory. A theoretical analysis would be desirable in order to assess the effect of the transient parameter adjustments on the overall system stability.

REFERENCES

1. P.V. Osburn, H.P. Whitaker, and A. Keezer, "New developments in the design of adaptive control systems", Inst. Aeronautical Sciences, Paper 61-39, 1961.

2. P.C. Parks, "Lyapunov redesign of model reference adaptive control systems", IEEE Trans. Automat. Contr., vol. AC-11, July 1966, pp. 362 - 367.

3. D.D. Donaldson and C.T. Leondes, "A model referenced parameter tracking technique for adaptive control systems", IEEE Trans. Appl. Ind., Sept. 1963, pp. 241 - 262.

4. R.M. Dressler, "An approach to model-reference adaptive control systems", IEEE Trans. Automat. Contr., vol. AC-12, Feb. 1967, pp. 75 - 80.

5. C.F. Price, "An accelerated gradient method for adaptive control", Proc. 9th IEEE Symp. Adaptive Processes Decision and Control, Dec. 1970, pp.IV.4.1-4.9.

6. J.W. Green, "Adaptive control of multi-loop speed control systems with particular reference to the Ward-Leonard system", Ph.D. thesis, Dep. Elec. Electron. Eng., Leeds Univ., Sept. 1969.

7. J.V. Medanic and P.V. Kokotovic, "Some problems in the development of adaptive systems using the sensitivity operator", Proc. 1965 IFAC Symp. Adaptive Control (Teddington, England), ISA, 1966, pp. 204 - 212.

8. P.V. Kokotovic, J.V. Medanic, S.P. Bingulac, and M.I. Vuskovic, "Sensitivity method in the experimental design of adaptive control systems", Proc. 3rd IFAC Congr. (London), 1966, pp.45B. 1-B.12.

9. R.L. Butchart and B. Shackcloth, "Synthesis of model reference adaptive control systems by Lyapunov's second method", Proc. 1965 IFAC Symp. Adaptive Control (Teddington, England), ISA, 1966, pp. 145 - 152.

10. C.A. Winsor and R.J. Roy, "Design of model reference adaptive control systems by Lyapunov's second method", IEEE Trans. Automat. Contr. (Corresp.), vol.AC-13, Apr. 1968, p. 204.

11. P.H. Phillipson, "Design methods for model reference adaptive systems", Proc. Inst. Mech. Eng., 1968-1969, vol. 183, part I, pp. 695 - 706.

12. J.W. Gilbart, R.V. Monopoli, and C.F. Price, "Improved convergence and increased flexibility in the design of model reference adaptive systems", Proc. 9th IEEE Symp. Adaptive Processes Decision and Control, Dec. 1970, pp.IV.3.1.-3.10.

13. R.V. Monopoli, J.W. Gilbart, and W.D. Thayer, "Model reference adaptive control based on Lyapunov-like techniques", Proc. 2nd

IFAC Symp. System Sensitivity and Adaptivity (Dubrovnik, Yugoslavia), Aug. 1968, pp.F.24-F.36.

14. R.V. Monopoli, "The Kalman-Yacubovich lemma in adaptive control system design", IEEE Trans. Automat. Contr., vol.AC-18, Oct.1973.

15. M.G. Currie and E.B. Stear, "State space structure of model reference adaptive control for a noisy system", 2nd Asilomar Conf. Circuits and Systems, 1968, pp. 401 - 405.

16. D.G. Luenberger, "Observing the state of a linear system", IEEE Trans. Mil. Electron., vol.MIL-8, Apr. 1964, pp. 74 - 80.

17. R.L. Carroll and D.P.Lindorff, "An adaptive observer for single-input single-output linear systems", IEEE Trans. Automat. Contr., vol.AC-18, Oct. 1973.

18. G. Luders and K.S. Narendra, "An adaptive observer and identifier for a single-input single-output linear system", IEEE Trans. Automat. Contr., vol.AC-18, Oct. 1973.

19. B. Porter and M.L. Tatnall, "Performance characteristics of multivariable model reference adaptive systems synthesized by Liapunov direct method", Int. J. Contr., vol.10, 1969, pp. 241 - 257.

20. B. Porter and M.L. Tatnall, "Stability analysis of a class of multivariable model reference adaptive systems having time-varying process parameters", Int. J. Contr., vol.11, 1970, pp. 325 - 332.

21. I.D. Landau, "A hyperstability criterion for model reference adaptive control systems", IEEE Trans. Automat. Contr. (short papers), vol.AC-14, Oct. 1969, pp. 552 - 555.

22. I.D. Landau, "A generalization of the hyperstability conditions for model reference adaptive systems", IEEE Trans. Automat. Contr. (Tech. notes, corresp.) vol.AC-17, Apr. 1972, pp. 246 - 247.

23. D.J.G. James, "Stability of a model reference control system", AIAA Journal, vol.9, May 1971, pp. 950 -952.

24. D.J.G. James, Ph.D. thesis, Dept. Eng., Warwick Univ., May 1971.

25. P.N. Nikiforuk and S.G. Rao, "The design of stable adaptive model reference control systems using sensitivity coefficients", Int. J. Contr., vol.14, 1971, pp. 257 - 267.

26. H.H. Choe and P.N. Nikiforuk, "Inherently stable feedback control of a class of unknown plants",Automatica, vol.7, 1971, pp. 607 - 625.

27. C.A. Winsor, "Model reference adaptive design", NASA-CR-98453, Nov. 1968.

28. I.D. Landau, "Model reference adaptive systems - A survey - What is possible and why?", J. Dynamic Syst., Meas. and Contr., June 1972, pp. 119 - 132.

29. D.P. Lindorff and R.L. Carroll, "Survey of adaptive control using Liapunov design", TR 72-7, Sch. of Eng., Univ. of Connecticut, Sept. 1972.

30. J.E. Gibson, Nonlinear Automatic Control. New York: McGraw-Hill, 1963, ch.11.

31. D.C. Ipson, Units, Dimensions and Dimensionless Numbers. New York: McGraw-Hill, 1960, ch.9-11.

32. R.E. Kalman and J.E. Bertram, "Control system analysis and design via the second method of Lyapunov", ASME Trans. J. Basic Eng., June 1963, pp. 371 - 393.

33. D.P. Lindorff, "Effects of incomplete adaptation and disturbance in adaptive control", Proc. JACC, 1972, pp. 562 - 567.

34. K.S. Narendra and S.S. Tripathi, "The choice of adaptive parameters in model reference control systems", 1971, Asilomar Conf., pp. 596 - 600.

35. D.P. Lindorff, "Adaptive control of multivariable systems", Proc. 3rd Asilomar Conf. on Circuits and Syst., 1969, pp. 119 - 124.

36. D.R. Towill, Transfer Functions Techniques for Control Engineers, Iliffe Books, 1970.

37. M. Margolis and C.T. Leondes, "On the theory of adaptive control systems; The learning model approach", Proc. 1st IFAC Congr. (Moscow), 1960, pp. 556 - 563.

38. T.C. Hsia and V. Vimolvanich, "An on-line technique for system identification", IEEE Trans. Automat. Contr. (short papers), vol. AC-14, Feb. 1969, pp. 92 - 96.

39. R.E. Nieman, D.G. Fisher and D.E. Seborg, "A review of process identification and parameter estimation techniques", Int. J. Contr., vol. 13, 1971, pp. 209 - 264.

40. K.J. Astrom and P. Eykhoff, "System identification - a survey", Automatica, vol. 7, 1971, pp. 123 - 162.

41. R.A. Rucker, "Real time system identification in the presence of noise", Proc. Western Electronics Conv., paper 23, Aug. 1963.

42. R.H. Khor, "A method for the determination of a differential equation model for simple nonlinear systems", IEEE Trans. Elect. Computers, vol. EC-12, Aug. 1963, pp. 394 - 400.

43. P.M. Lion, "Rapid identification of linear and nonlinear systems", AIAA Journal, vol. 5, Oct. 1967, pp. 1835 - 1842.

44. P.C. Young, "Process parameter estimation and self-adaptive control", Proc. 1965 IFAC Symp. Adaptive Control (Teddington, England), ISA, 1966, pp. 118 - 139.

45. P.C. Young, "An instrumental variable method for real-time identification of a noisy process", Automatica, vol. 6, 1970, p.p. 371 - 287.

46. P.C. Young, "Identification problems associated with the equation error approach to process parameter estimation", Proc. 2nd Asilomar Conf. on Circuits and Syst., Oct. 1968, pp. 416 - 422.

47. H.F. Meissinger and G.A. Bekey, "An analysis of continuous parameter identification methods", Simulation, vol. 6, Feb. 1966, pp. 94 - 101.

48. P.C. Parks, "Stability problems of model reference and identification systems", Preprints IFAC Symp. on Identification, Prague, paper 5.4, 1967.

49. J.S. Pazdera and H.J. Pottinger, "Linear system identification via Liapunov design techniques", Proc. JACC, 1969, pp. 795 - 801.

50. K.S. Narendra and P. Kudva, "Adaptive control and identification of multivariable systems using Liapunov's Direct Method", Bector Center Report CT-56, Dept. Eng., Yale University, June 1973.

51. I.D. Landau, "Hyperstability and Identification", Proc. 9th IEEE Symp. Adapt. Processes Decision and Contr., Dec. 1970, pp.X.4.1 - X.4.8.

52. W.D.T. Davies and W. Fishwick, "The synthesis of dynamic models of plants and processes", Proc. Inst. Mech. Eng., vol.179, 1964-65, pp. 29 - 36.

53. D.W. Ricker and G.N. Saridis, "Analogue methods for on-line system identification using noisy measurements", Simulation, Nov. 1968, pp. 241 - 248.

54. R.E. Kopp and R.J. Orford, "Linear regression applied to system identification for adaptive control systems", AIAA Journal, 1963, pp. 2300 - 2306.

55. R.A. Mollenkamp, C.L. Smith and A.B. Corripio, "On-line model identification and control using the Kalman Filter", Proc. JACC, 1971, pp. 751 - 759.

56. F.F. Kuo, Network Analysis and Synthesis, Wiley, 1966, Ch. 10.

57. V.M. Popov, "The solution of a new stability problem for controlled systems", Automation and Remote Control, vol. 24, Jan. 1963, pp. 1 - 23.

58. B.D.O. Anderson,"A simplified viewpoint of hyperstability", IEEE Trans. Automat. Contr. (Corresp.), vol.AC-13, June 1968, pp. 292 - 294.

59. B.D.O. Anderson. "A system theory criterion for positive real matrices", SIAM J. Control, ser. A, vol. 5, May 1967, pp. 171 - 182.

60. I.D. Landau, Thesis for Docteur Es Sciences Physiques, Grenoble Univ. (France), June 1973.

61. I.D. Landau and B. Courtiol, "Adaptive model following systems for flight control and simulation", 10th AIAA Aerospace Sciences meeting, San Diego, Jan. 1972.

62. B. Courtiol, "On a multidimensional systems identification method", IEEE Trans. Automat. Contr. (Tech. notes, Corresp.), vol.AC-17, June 1972, pp. 390 - 394.

63. I.D. Landau, E. Sinner and B. Courtiol "Model reference adaptive systems - some examples", ASME Winter Annual Meeting, New York, Nov. 1972.

64. I.D. Landau, "A hyperstable algorithm for identification through the equation error method", Proc. 5th Int. Hawaii Conf. on System Sc., Honolulu, Jan. 1972, pp. 382 - 384.

65. B. Porter, Synthesis of Dynamic Systems, Nelson, 1969.

66. Y. Kaya and S. Yamamura, "A self-adaptive system with a variable-parameter PID controller", IEEE Trans. Automat. Contr., Jan. 1962, pp. 378 - 386.

67. P.C. Young and C.B. Yancey, "A second-generation adaptive pitch autostabilization system for a missile or aircraft", Tech. note 404 - 109, Naval Weapons Center, China Lake, California, August 1971.

68. C.F. Price, "Advanced concepts for guidance and control of tactical missiles", TR-170-5, The Analytic Sciences Corporation Reading, Massachusetts, June 1973.

69. D.D. Siljak, "Algebraic criterion for absolute stability, optimality and passivity of dynamic systems", Proc. IEE, vol.117, Oct. 1970, pp. 2033 - 2036.

70. J.S. Karmarkar, "On Siljak's absolute stability test", Proc. IEEE (letters), vol. 58, May 1970, pp. 817 - 819.

71. J.S. Karmarkar, "On nonegativity of even polynomials", ibid., May 1970, pp. 835 - 836.

72. J.S. Karmarkar, "Application of positive real functions in hyperstable discrete model reference adaptive system design", Proc. 5th Int. Hawaii Conf. on System Sc., Honolulu, Jan. 1972, pp. 382 - 384.

73. K. Ogata, State Space Analysis of Control Systems, Prentice Hall, 1967.

74. J.J. Hirsch and P. Peltie, "Real-time identification using adaptive discrete model", Proc. IFAC Symp. Sensitivity, Adaptivity and Optimality, Ischia, Italy, June 1973, pp. 290 - 297.

75. I.D. Landau, "Design of discrete model reference adaptive systems using the positivity concept", ibid., June 1973, pp. 307 - 314 .

76. S.C. Chuang, Ph.D. thesis, Dept. Computing and Control, Imperial College, 1972.

77. D.R. Towill, "Lower order modelling techniques: tools or toys", IEE Computer Aided Control System Design Conference, Cambridge, April 1973, pp. 206 - 212.

78. B. Porter and M.L. Tatnall, "Performance characteristics of an adaptive hydraulic servo-mechanism", Int. J. Contr., vol. 11, 1970, pp. 741 - 757.

79. E. Sinner, "An adaptive state variable feedback controller", (in French) Colloque Franco-Allemand Les Applications Industrielles Des Systemes Adaptatifs, Freiburg Universitat, April 1973, pp. 115 - 136.

80. G. Bethoux and E. Courtiol, "A hyperstable discrete model reference adaptive control system", Proc. IFAC Symp Sensitivity, Adaptivity and Optimality, Ischia, Italy, June 1973, pp. 290 - 297.

81. J. Monk and J. Comfort, "Mathematical model of an internal combustion engine and dynamometer test rig", Measurement and Control, vol. 3, June 1970, pp. T93 - 100.

82. J. Monk, Ph.D. thesis, Dept. Eng., Warwick Univ., 1970.

83. T.C. Hsia, "Lower order design for higher order adaptive control systems", Proc. of IEEE System Science and Cybernetics Conference, Pittsburgh, Pa., Oct. 1970.

84. K. Inoue and N. Sugimoto, " The parameter sensitivity of a model reference control system and its synthesis", J. Japan Assoc. Automat. Control Engrs., vol. 13, Sept. 1969, pp. 580 - 587. (in Japanese).

85. D.G. Luenberger, "Canonical forms for linear multivariable systems", IEEE Trans. Automat. Contr., vol. AC-12, June 1967, pp. 290 - 293.

APPENDICES

A.1. Liapunov Design [12]

The state equations of the plant and model are

plant: $\dot{\underset{\sim}{\Theta}}_p = A\,\underset{\sim}{\Theta}_p + \underset{\sim}{b}\,K_v\,K_c\,r$ (a.1.1)

model: $\dot{\underset{\sim}{\Theta}}_m = A\,\underset{\sim}{\Theta}_m + \underset{\sim}{b}\,K\,r$ (a.1.2)

Define $\underset{\sim}{e} = \underset{\sim}{\Theta}_m - \underset{\sim}{\Theta}_p, \quad X = K - K_v\,K_c$

We obtain $\dot{\underset{\sim}{e}} = A\,\underset{\sim}{e} + \underset{\sim}{b}\,X\,r$ (a.1.3)

Choose a V function

$$V = \underset{\sim}{e}^T P\,\underset{\sim}{e} + \lambda\,(X + \gamma\,K_v m)^2 \qquad \text{(a.1.4)}$$

where $m = B'\,\underset{\sim}{e}^T P\,\underset{\sim}{b}\,r$ (a.1.5)

$$B' = 1/(\lambda\,K_v)$$

The time derivative of V is

$$\dot{V} = \underset{\sim}{e}^T(A^T P + PA)\,\underset{\sim}{e} + 2\underset{\sim}{e}^T P\,\underset{\sim}{b}\,X\,r + 2\lambda\,(X + \gamma\,K_v m)(\dot{X} + \gamma\,K_v\dot{m}) \qquad \text{(a.1.6)}$$

If we select the adaptive rule:

$$\dot{K}_c = m + \gamma\,\dot{m} \qquad \text{(a.1.7)}$$

i.e. $\dot{X} + \gamma\,K_v\dot{m} = -K_v m$ (a.1.8)

then $\dot{V}$ becomes

$$\dot{V} = -\underset{\sim}{e}^T Q\,\underset{\sim}{e} - 2\,\lambda\gamma\,K_v^2 m^2 \qquad \text{(a.1.9)}$$

P and Q are positive definite symmetric matrices which satisfy the Liapunov matrix equation:

$$A^T P + PA = -Q \qquad \text{(a.1.10)}$$

For example, if

$$A = \begin{bmatrix} 0 & 1 \\ -1 & -2 \end{bmatrix} \qquad \underset{\sim}{b} = \begin{bmatrix} 0 \\ 1 \end{bmatrix}$$

Let $\quad Q = \begin{bmatrix} 2 & 0 \\ 0 & 2 \end{bmatrix}$

Solving equation (a.1.10), we obtain $\quad P = \begin{bmatrix} 3 & 1 \\ 1 & 1 \end{bmatrix}$

Hence, $\quad \underset{\sim}{e}^T P \underset{\sim}{b} = e_1 + e_2$

A.2. Differential Equations Of The Various Designs

The following differential equations describe the dynamics of the systems shown in Fig. 2.2.

First Order Systems

The error differential equation is

$$T\,\dot{e}_1 + e_1 = (K - K_v K_c)\, r \qquad \text{(a.2.1)}$$

and the adaptive equations are

M.I.T. $\quad \dot{K}_c = B'\, e_1\, \Theta_m$

Liapunov
$$\begin{cases} m = B'\, e_1\, r & \text{(a.2.2)} \\ \dot{K}_c = m + \gamma\, \dot{m} & \text{(a.2.3)} \end{cases}$$

The actual values used in the simulation are

$$T = 0.05, \quad K = 1, \quad K_v = 10, \quad K_c(t_o) = 0.$$

Second Order Systems

The error differential equation is

$$a_2\, \ddot{e}_1 + a_1\, \dot{e}_1 + e_1 = (K - K_v K_c)\, r \qquad \text{(a.2.4)}$$

and the adaptive equations are

M.I.T. $\quad \dot{K}_c = B'\, e_1\, \Theta_m \qquad$ (a.2.5)

Liapunov
$$\begin{cases} m = B'\, (e_1\, P_{12} + \dot{e}_1\, P_{22})\, r & \text{(a.2.6)} \\ \dot{K}_c = m + \gamma\, \dot{m} & \text{(a.2.7)} \end{cases}$$

Dressler $\dot{K}_c = B' e_1 r$ (a.2.8)

Price $\dot{K}_c = B' e_1 r + \gamma_c \frac{d}{d_t} (B' e_1 r)$ (a.2.9)

Monopoli

$$\begin{cases} \alpha_1 \dot{y} + \alpha_2 y = r, \quad (\frac{\alpha_2}{\alpha_1} \leq \frac{a_1}{a_2}) & \text{(a.2.10)} \\ \dot{K}_c = B' e_1 r & \text{(a.2.11)} \\ (\alpha_1 \frac{d}{d_t} + \alpha_2) K_c y = K_c r + \alpha_1 \dot{K}_c y & \text{(a.2.12)} \end{cases}$$

The actual values used in the simulation are

$a_2 = 1, \; a_1 = 2, \; K = 1, \; K_v = 2, \; K_c(t_o) = 0.2,$

$P_{12} = P_{22} = 1, \; \alpha_1 = \alpha_2 = 2.$

A.3. Dimensional Analysis [31]

(i) The equations describing the first order M.I.T. system are:

$$T\dot{e}_1 + e_1 = (K - K_v K_c)\, r \qquad (a.3.1)$$

$$\dot{K}_c = B'\, e_1\, \Theta_m \qquad (a.3.2)$$

Let R be the amplitude of a deterministic input signal (e.g. step, sine wave or square wave) and define the following variables:

$$\varepsilon = e_1 / (KR) \qquad (a.3.3)$$

$$r_u = r / R \qquad (a.3.4)$$

$$y_m = \Theta_m / (KR) \qquad (a.3.5)$$

$$\chi = (K - K_v K_c) / K \qquad (a.3.6)$$

$$\tau = t / T \qquad (a.3.7)$$

Substituting these into equations (a.3.1) and (a.3.2), we obtain

$$\frac{d\varepsilon}{d\tau} + \varepsilon = \chi\, r_u \qquad (a.3.8)$$

$$\frac{d\chi}{d\tau} = -(KK_v\, B'\, R^2\, T)\, \varepsilon\, y_m \qquad (a.3.9)$$

Hence the required dimensionless parameter π_2 is

$$\pi_2 = KK_v\, B'\, R^2\, T \qquad (a.3.10)$$

Repeating the same process for the Liapunov design with the same dimensionless variables, we obtain

$$\frac{d\varepsilon}{d\tau} + \varepsilon = \chi\, r_u \qquad (a.3.11)$$

$$\frac{d\chi}{d\tau} = -(K_v\, B'\, R^2\, T)\, \varepsilon\, r_u \qquad (a.3.12)$$

Hence

$$\pi_2 = K_v\, B'\, R^2\, T \qquad (a.3.13)$$

The dimensionless performance indices are obtained by using the dimensionless error ε and the dimensionless time variable τ. For instance, to obtain π_1 using the ISE criterion, we have

$$\pi_1 = \int_0^\infty \varepsilon^2 \, d\tau$$

$$= \frac{1}{K^2 R^2 T} \int_0^\infty e_1^2 \, dt$$

Likewise, dimensionless parameters and performance indices for other inputs are derived.

(ii) The equations describing the second order M.I.T. system are:

$$a_2 \ddot{e}_1 + a_1 \dot{e}_1 + e_1 = (K - K_v K_v) r \qquad (a.3.14)$$

$$\dot{K}_c = B' e_1 \Theta_m \qquad (a.3.15)$$

Using the same dimensionless variables as (a.3.3) - (a.3.6) and define

$$\tau = t / a_1 \qquad (a.3.16)$$

Substituting these into equations (a.3.14) and (a.3.15), we obtain

$$(a_2 / a_1^2) \frac{d^2 \varepsilon}{d \tau^2} + \frac{d\varepsilon}{d\tau} + \varepsilon = X r_u \qquad (a.3.17)$$

$$\frac{dX}{d\tau} = -(K K_v B' R^2 a_1) \varepsilon y_m \qquad (a.3.18)$$

Hence the required dimensionless parameter π_2 is

$$\pi_2 = K K_v B' R^2 T \qquad (a.3.19)$$

and (a_2 / a_1^2) becomes another dimensionless parameter. Likewise, dimensionless parameters and performance indices for other systems and for other inputs are derived.

A.4. The Stochastic Signal

A stochastic signal is used to simulate a wide band noise input in Chapter 2 and to simulate measurement noise in Chapter 4. This signal is required to approximate a band limited white noise. Theoretically it can be generated by passing a white noise signal through a low pass filter. However, when used with a digital simulation language, the generation of white noise digitally will need a very small integration interval and consequently lengthen the simulation time. Hence a more direct method (described below) is used to generate the stochastic signal. The main reason for using a digitally generated random signal, instead of using an analogue noise signal through A/D converter, is that the same sequence can be regenerated and hence very useful for comparing responses of different systems.

The method adopted was suggested by James [24]. It is obtained by spacing a zero mean, Gaussianly distributed sequence of pseudo random numbers, by an interval of h seconds and with linear interpolations. For small values of ωh, James has shown that the autocorrelation $R_{xx}(\tau)$ and power spectral density $\phi_{xx}(\omega)$ of this stochastic signal $\alpha(t)$ are those shown in Fig. A.4.1 and A.4.2. Note that $R_{xx}(o)$ is 2/3 times the variance of the random number (σ_n^2). Hence the root mean square value of this signal is $\sqrt{2/3}$ (= 1/1.22474) times that of the random number. The half-power point is seen to be approximately one third of the cutoff (π/h rad/sec). It is thus assumed that for $\omega < \pi/3h$, the signal has approximately flat (white) power spectrum.

There exists a subroutine - GAUSS (N) in the XDS-SIGMA 5 digital computer to generate a sequence of zero mean, unity variance random numbers having a Gaussian probability amplitude distribution. The sequence will be different for each different starting value N.

Hence to obtain $\alpha(t)$ one just needs to write a subroutine to interpolate between these random numbers. This subroutine is called RANDOM. The flow chart is shown in Fig. A.4.3 while a listing of the actual program in Fortran, to be used with the main program written in the SL 1 simulation language, is shown in Fig. A.4.4. The signal $\alpha(t)$ will have a bandwidth determined by the interpolation interval H as specified by the main program and the particular sample is determined by the number N. An ensemble of this signal is shown in Fig. A.5.

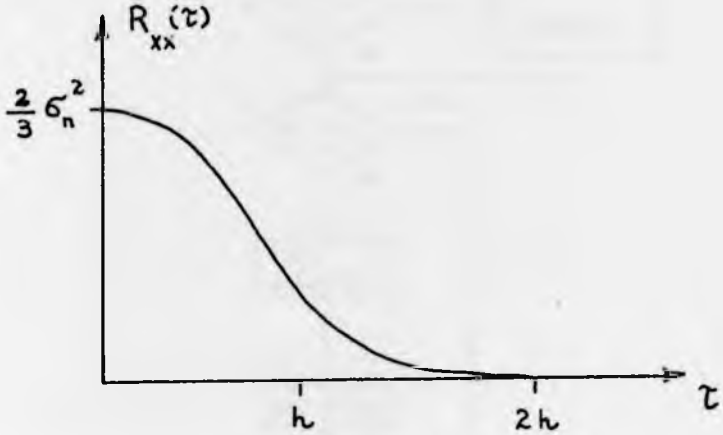

Fig. A.4.1 Autocorrelation function of $\alpha(t)$

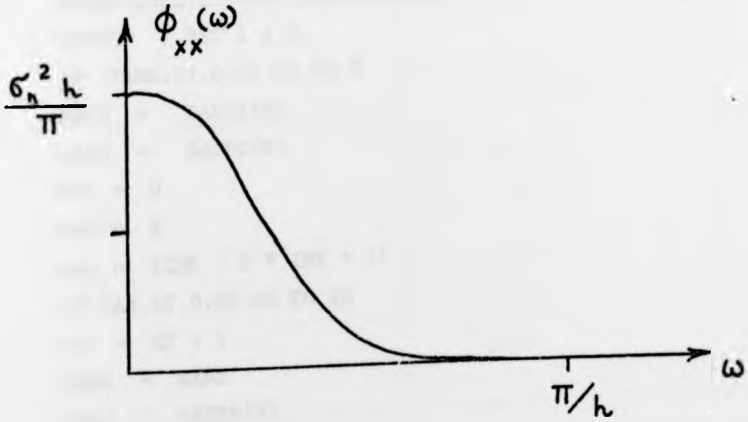

Fig. A.4.2 Power Spectral Density of $\alpha(t)$

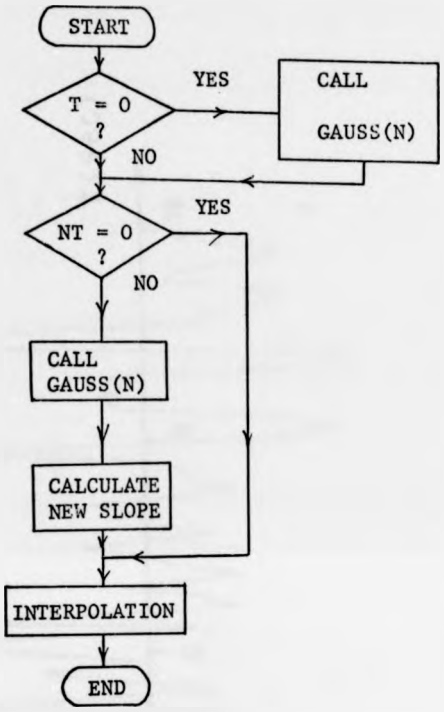

Fig. A.4.3 Flow Chart of Subroutine RANDOM

```
      SUBROUTINE RANDOM (RAN, TIME, N)
      COMMON  / SET 1 / H
      IF (TIME.GT.0.0) GO TO 9
      RAN2  =   GAUSS(N)
      RAN2  =   GAUSS(N)
      NT  =  0
      GO TO  8
9     AA  =  TIME - H * (NT + 1)
      IF (AA.LT.0.0) GO TO 10
      NT  =  NT + 1
8     RAN1  =  RAN2
      RAN2  =  GAUSS(N)
      SLOPE  =  (RAN2 - RAN1) / H
10    VA  =  TIME - H * NT
      RAN  =  1.22474 * (RAN1 + SLOPE * VA)
      RETURN
      END
```

Fig. A.4.4 Listing of the Subroutine RANDOM

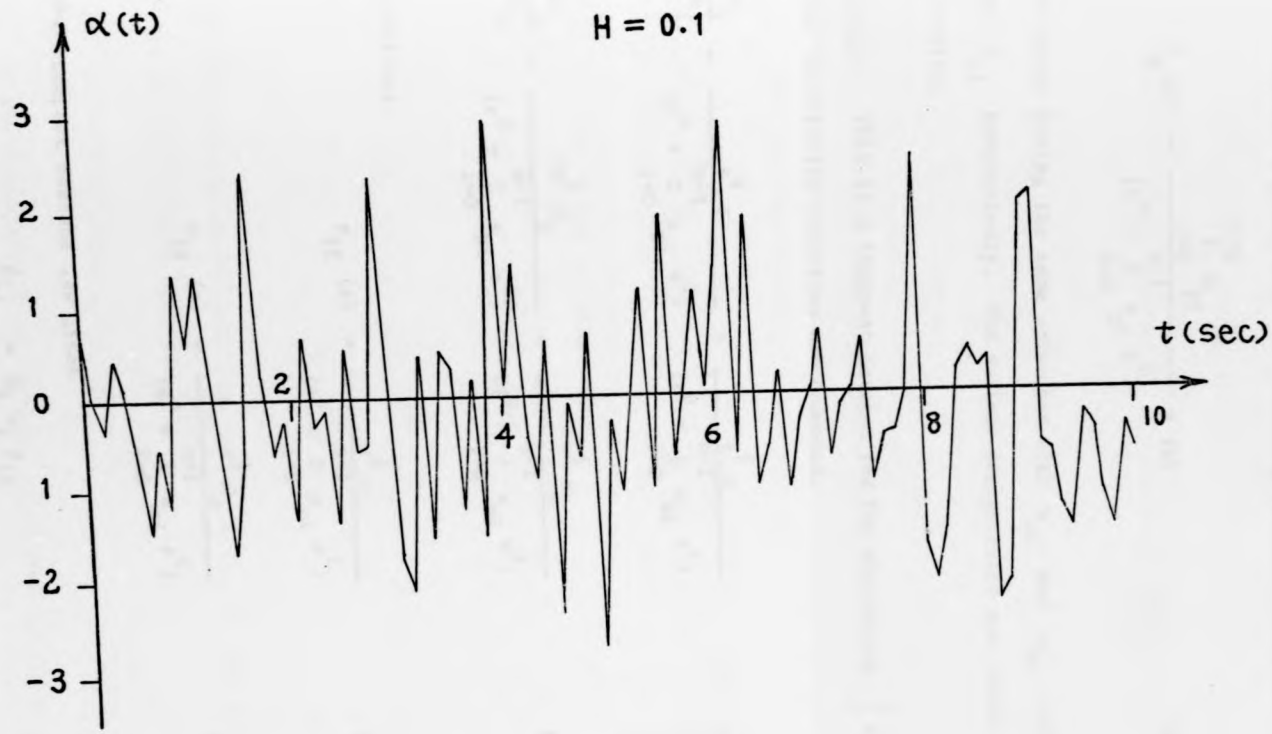

Fig. A.4.5

A.5. The Adaptive Laws For General Parameter Adjustments [1,4,10]

Consider a plant with the following transfer function

$$\Theta_p(s) = \frac{\sum_{i=0}^{n-1} b_{pi} s^i}{(s^n + \sum_{i=0}^{n-1} a_{pi} s^i)} r(s) \qquad (a.5.1)$$

With the model having the same order but with b_{mi} and a_{mi} replacing b_{pi} and a_{pi} respectively. The various design rules are stated in the following.

M.I.T. rule: This is a steepest descent law for minimising $\int e^2 \, d\,t$. First the sensitivity functions are computed.

$$\frac{\delta\Theta_p}{\delta b_i} = \frac{s^i r}{(s^n + \sum_{i=0}^{n-1} a_{pi} s^i)} \simeq \frac{s^i r}{(s^n + \sum_{i=0}^{n-1} a_{mi} s^i)} \qquad (a.5.2)$$

$$\frac{\delta\Theta_p}{\delta a_i} = \frac{-s^i \Theta_p}{(s^n + \sum_{i=0}^{n-1} a_{pi} s^i)} \simeq \frac{-s^i \Theta_p}{(s^n + \sum_{i=0}^{n-1} a_{mi} s^i)} \qquad (a.5.3)$$

If one defines

$$r_{if}(s) = \frac{s^i r}{(s^n + \sum_{i=0}^{n-1} a_{mi} s^i)} \qquad (a.5.4)$$

$$\Theta_{if}(s) = \frac{s^i \Theta_p}{(s^n + \sum_{i=0}^{n-1} a_{mi} s^i)} \qquad (a.5.5)$$

then the steepest descent law gives

$$\dot{b}_{pi} = \beta_i e_1 r_{if} \qquad (a.5.6)$$

$$\dot{a}_{pi} = -\alpha_i e_1 \Theta_{if} \qquad (a.5.7)$$

Dressler: This is obtained by using a parametric optimization approach to satisfy the following inequality

$$e_1 \cdot \Delta e_1 \leq 0 \qquad \text{(a.5.8)}$$

so that at least the local convergence is guaranteed. The resulting laws are:

$$\dot{b}_{pi} = \beta_i \, e_1 \, r^{(i)} \qquad \text{(a.5.9)}$$

$$\dot{a}_{pi} = -\alpha_i \, e_1 \, \Theta_m^{(i)} \qquad \text{(a.5.10)}$$

where $^{(i)}$ denotes i th differentiation with respect to time.

Liapunov: The positive definite V function is

$$V = \underset{\sim}{e}^T P \underset{\sim}{e} + \sum_{i=0}^{n-1} \left[\lambda_{bi}(b_{pi} - b_{mi})^2 + \lambda_{ai}(a_{pi} - a_{mi})^2\right] \qquad \text{(a.5.11)}$$

The adjustment laws chosen to ensure that

$$\dot{V} = -\underset{\sim}{e}^T Q \underset{\sim}{e} \quad (\leq 0) \qquad \text{(a.5.12)}$$

are

$$\dot{b}_{pi} = \beta_i \, (\underset{\sim}{e}^T \underset{\sim}{P}_n) \, r^{(i)} \qquad \text{(a.5.13)}$$

$$\dot{a}_{pi} = -\alpha_i \, (\underset{\sim}{e}^T \underset{\sim}{P}_n) \, \Theta_p^{(i)} \qquad \text{(a.5.14)}$$

where $\underset{\sim}{P}_n$ denotes the n th column of the matrix P. P and Q must satisfy the Liapunov matrix equation

$$A_m^T P + P A_m = -Q \qquad \text{(a.5.15)}$$

where A_m is the state matrix of the model. Proportional damping terms can be included if required by modifying the V and $\dot{V}$ functions [12].

A.6. Hyperstability and Identification [51]

Theory

Consider the model reference identification system for a plant with m inputs and r outputs as shown in Fig. A.6.1. The dynamic equations are:

$$\text{plant} \quad \begin{cases} \dot{\underset{\sim}{y}}_p = A_p \underset{\sim}{y}_p + B_p \underset{\sim}{u} & \text{(A.6.1)} \\ \underset{\sim}{\Theta}_p = C \underset{\sim}{y}_p & \text{(A.6.2)} \end{cases}$$

$$\text{model} \quad \begin{cases} \dot{\underset{\sim}{y}}_m = A_m(t) \underset{\sim}{y}_m + B_m(t) \underset{\sim}{u} & \text{(A.6.3)} \\ \underset{\sim}{\Theta}_m = C \underset{\sim}{y}_m & \text{(A.6.4)} \end{cases}$$

$$\text{error} \quad \begin{cases} \underset{\sim}{\varepsilon} = \underset{\sim}{y}_p - \underset{\sim}{y}_m & \text{(A.6.5)} \\ \underset{\sim}{e} = \underset{\sim}{\Theta}_p - \underset{\sim}{\Theta}_m = C \underset{\sim}{\varepsilon} & \text{(A.6.6)} \\ \underset{\sim}{\nu} = F \underset{\sim}{e}, \ (\underset{\sim}{\nu}(s) = Z_1(s) \underset{\sim}{e}(s)) & \text{(A.6.7)} \end{cases}$$

$$\begin{matrix} \text{Adjustable} \\ \text{Parameter} \end{matrix} \quad \begin{cases} \dot{A}_m(t) = G \cdot \phi(\nu, t) & \text{(A.6.8)} \\ \dot{B}_m(t) = G \cdot \eta(\nu, t) & \text{(A.6.9)} \end{cases}$$

where G is defined below in equation (A.6.11). From equations (A.6.1) - (A.6.5), the error equation is found to be

$$\dot{\underset{\sim}{\varepsilon}} = A_p \underset{\sim}{\varepsilon} + G \underset{\sim}{W}_1 \qquad \text{(A.6.10)}$$

$$G \underset{\sim}{W}_1 = (A_p - A_m(t)) \underset{\sim}{y}_m + (B_p - B_m(t)) \underset{\sim}{u} \qquad \text{(A.6.11)}$$

Note that G consists of elements equal to 1 or 0 and $\underset{\sim}{W}_1$ must have the same dimension as $\underset{\sim}{\nu}$. Also the dimension of $\underset{\sim}{\nu}$ must be equal to the number of lines of $A_m(t)$ and $B_m(t)$ which contain elements not identical to the corresponding elements of A_p and B_p.

Now combining equations (A.6.10), (A.6.6) and (A.6.7), and taking an inverse Laplace Transform, we obtain

$$\underset{\sim}{\nu}(s) = Z_1(s) \cdot C(sI - A_p)^{-1} \cdot G \cdot \underset{\sim}{W}_1(s) \qquad (A.6.12)$$

Define

$$Z(s) = Z_1(s) \cdot C(sI - A_p)^{-1} \cdot G \qquad (A.6\ 13)$$

$$\underset{\sim}{W}_2 = - \underset{\sim}{W}_1 \qquad (A.6.14)$$

Equation (A.6.12) becomes a linear system having an input-output transfer function matrix $Z(s)$ and with a feedback (from $\underset{\sim}{\nu}(s)$ to $\underset{\sim}{W}_2(s)$) which is nonlinear and time varying (given by A.6.8, A.6.9 and A.6.11). This equivalent system is shown in Fig. A.6.2. Now Popov's hyperstability theorem is directly applicable. Assuming that the pair (A_p, B_p) is completely controllable and the pair (C, A_p) is completely observable, the following theorem due to Landau gives the hyperstability design.

<u>Theorem</u> (Landau): Sufficient and partially necessary conditions in order that the adaptive identification system described by equations (A.6.1) to (A.6.9) be asymptotically hyperstable are the following:

(1) the transfer matrix $Z(s)$ given by equation (A.6.13) be strictly positive real;

(2) the computing block of the matrices $\dot{A}_m(t)$ and $\dot{B}_m(t)$ in order that the nonlinear feedback block satisfies the Popov's inequality constraint (equation (1.2) of Chapter 1) is given by

$$\phi_{ij}(t) = \alpha_{ij}\, \nu_i\, y_{mj} + \gamma_{ij} \frac{d}{dt} (\alpha_{ij}\, \nu_i\, y_{mj}) \qquad (A.6.15)$$

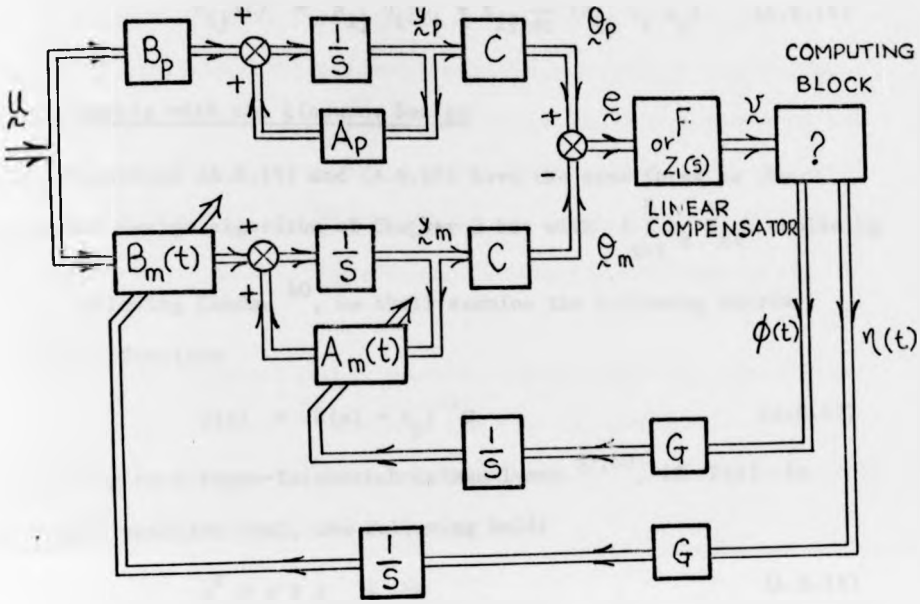

Fig. A.6.1 Hyperstability design

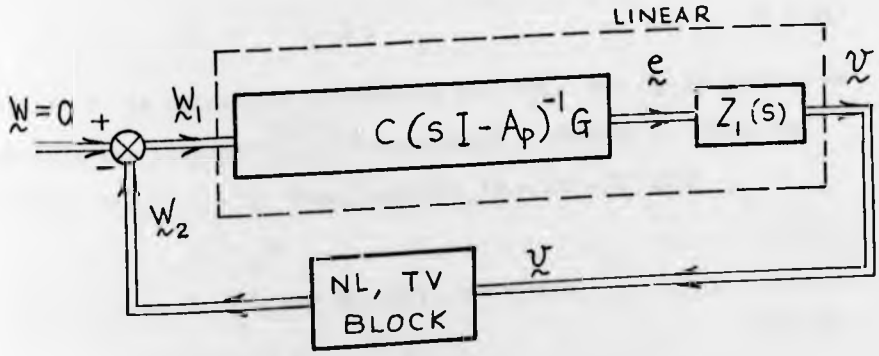

Fig. A.6.2 The equivalent system

$$\eta_{ij}(t) = \beta_{ij}\, \nu_i\, u_j + \delta_{ij} \frac{d}{dt} (\beta_{ij}\, \nu_i\, u_j) \qquad (A.6.16)$$

Relationship with the Liapunov Design

Equations (A.6.15) and (A.6.16) have the same forms as the Liapunov design algorithm of Chapter 3 but with $(\sum_{k=1}^{n} e_k\, P_{ki})$ replacing ν_i. Following Landau [60], we shall examine the following matrix transfer function

$$Z(s) = H(sI - A_p)^{-1} G \qquad (A.6.17)$$

According to a Popov-Yacubovich-Kalman lemma [59,60], if $Z(s)$ is strictly positive real, the following holds

$$A_p^T P + P A_p = -Q \qquad (A.6.18)$$

$$P G = H^T \qquad (A.6.19)$$

where P, Q are symmetric positive definite matrices. Now applying these results to the hyperstable system, we obtain

$$P G = C^T F^T \qquad (A.6.20)$$

This means that the matrix of the series compensator can also be found by

$$F = G^T P C^{-1} \qquad (A.6.21)$$

where P is calculated by equation (A.6.18). Now let us give as an example the Liapunov synthesis presented in Chapter 3. There we assume $C = I$, $G = I$; hence equation (A.6.20) will give

$$P = F \qquad (A.6.22)$$

From equation (A.6.7) and (A.6.22), therefore

$$\underset{\sim}{\nu} = F \underset{\sim}{e} = P \underset{\sim}{e} \qquad (A.6.23)$$

$$\nu_i = \sum_{k=1}^{n} e_k\, P_{ki} \qquad (A.6.24)$$

The demonstration that the Liapunov and hyperstability designs are basically equivalent is thus completed. This result is very useful as it gives flexibility to the design of the series compensator which now can be designed either by using the positive real condition on equation (A.6.13) or by using the Liapunov matrix equation (A.6.18) together with (A.6.21). Further the following cross-benefits are observed:

(1) The Liapunov matrix equation together with the expressions for V and $\dot{V}$ indicate the rate of convergence of the error vector [32]. No such information is directly obtainable from the hyperstability approach.

(2) The analysis of real systems is easily done via hyperstability approach. For instance Landau [51] has shown that the input and output measurement noise, the time variation of A_p and B_p, and the higher order neglected modes of the plant can all be grouped together to form an additional input $\underset{\sim}{W}$ (i.e. $\underset{\sim}{W} \neq 0$ in Fig. A.6.2) to the original hyperstable system and a bounded-input condition assures bounded-output of the overall system. This result cannot be easily proven via the Liapunov approach.

(3) The matrix positive real condition or the Liapunov matrix equation is to be satisfied for the known range of variations of A_p. For a single dimensional system, $Z(s)$ turns out to be a transfer function if A_p is expressed in the companion form (see Section 4.2). Hence the positive real condition with parameter variations is easily obtained (some examples given in appendix A.8). However for other forms of A_p, $Z(s)$ becomes a transfer function matrix and the positive real condition with a range of parameter

variation is much more difficult to establish. Then it will be simpler to use the Liapunov matrix equation.

[The author wishes to thank Professor I.D. Landau and his colleagues at the ALSTHOM Research Laboratory (Grenoble, France) for useful discussions on the material presented in this appendix.]

A.7. System Identifiability [46]

A process can be considered fully identifiable in a parametric sense provided

(a) it is activated by a sufficiently exciting input signal;

(b) it possesses an augmented state vector (i.e. both input and output states are grouped together) whose elements are neither linearly dependent, nor approach linear dependency;

(c) it is controllable and observable in the sense that no pole zero cancellation is present.

The condition (a) above will further need to satisfy the following conditions if the parameter error is to be guaranteed $\to 0$ as the error measure (equation or response error) $\to 0$:

(i) the input signal be persistently exciting in the sense that

$$\frac{1}{T}\int_0^T u^2\,dt \;>>\; 0 \;;$$

(ii) the number of distinct frequency components present in any purely periodic input signal be equal to or exceed d where

$$d = (m + n + 1)/_2 \;; \quad (m + n + 1) \text{ even.}$$

$$(m + n + 2)/_2 \;; \quad (m + n + 1) \text{ odd.}$$

m, n being the order of zeros and poles of the plant transfer function. If not all of the parameters are to be adjusted, the above condition can be relaxed, e.g. $d = P/2$ where P = number of parameters to be identified.

Practical experiments suggest that the random-noise-type of input signal usually gives excellent identification results. The rate of convergence is also found to be dependent on the bandwidth of the input signal; the best single frequency or best cutoff frequency of the input signal is in the neighbourhood of the natural frequency of the plant.

A.8. Parameter Sensitivity of Positive Real Functions

We want to examine the design of $Z_1(s)$ to ensure that $G(s)$, given by $Z_1(s) / D_p(s)$ is positive real for a range of parameter variations in $D_p(s)$. For low order transfer functions, explicit conditions required for positive realness can be readily derived. Some examples are given in the following:

(i) $$G(s) = \frac{s + b}{s^2 + a_1 s + a_0}$$

the necessary and sufficient conditions for positive realness are

$$b\, a_0 \geq 0$$

$$(a_1 - b) \geq 0$$

hence one can choose $0 \leq b \leq a_{1\,min}$

(ii) $$G(s) = \frac{s^2 + b_1 s + b_0}{s^3 + a_2 s^2 + a_1 s + a_0}$$

the sufficient conditions for positive realness are

$$b_0\, a_0 \geq 0$$

$$a_1\, b_1 - a_0 - a_2\, b_0 \geq 0$$

$$a_2 - b_1 \geq 0$$

also for stability of the plant itself, we have $a_2\, a_1 > a_0$.

Now one may choose

$$b_1 = a_{2\,min}$$

$$b_0 = \frac{1}{a_{2\,max}} (a_{2\,min} \cdot a_{1\,min} - a_{0\,max})$$

For higher order systems, the explicit conditions become more difficult to solve; also the sufficient conditons may be too

conservative and one would like to consider the necessary conditions as well. Then a numerical test method using computer calculations will be extremely helpful. Such a method has been suggested by Siljak [69] and developed by Karmarker [70-72].

A.9. The Generalized Equation Error (G.E.E.) Method [41-49]

Consider a linear time-invariant plant as shown in Fig. (A.9.1). If the state variable filters which process the input and the output are suitably chosen, we obtain the following equality:

$$\frac{\Theta_f(s)}{u_f(s)} = \frac{\Theta(s)}{u(s)} = \frac{N_p(s)}{D_p(s)} = \frac{\sum_{j=0}^{n-1} b_{pj}\, s^j}{s^n + \sum_{j=0}^{n-1} a_{pj}\, s^j} \qquad (A.9.1)$$

Therefore,

$$0 = D_p(s)\, \Theta_f(s) - N_p(s)\, u_f(s) \qquad (A.9.2)$$

Now using a series-parallel model as shown, we define an e_f as

$$e_f(s) = D_m(s)\, \Theta_f(s) - N_m(s)\, u_f(s) \qquad (A.9.3)$$

Subtracting (A.9.3) from (A.9.2), we obtain

$$e_f(s) = (D_m(s) - D_p(s))\, \Theta_f(s) - (N_m(s) - N_p(s))\, u_f(s) \qquad (A.9.4)$$

or in the time domain,

$$e_f(t) = \sum_{j=0}^{n-1} \left[(a_{mj}(t) - a_{pj})\Theta_{fj} - (b_{mj}(t) - b_{pj})u_{fj}\right] \qquad (A.9.5)$$

where $\Theta_{fj} = \frac{d^j}{dt^j}\Theta_f$ and $u_{fj} = \frac{d^j}{dt^j} u_f$ and these signals are available from the SVF without pure differentiations. The parameter adjustment laws according to a steepest descent minimization are:

$$\dot{a}_{mj}(t) = -\alpha_j\, e_f \frac{\delta\, e_f}{\delta\, a_{mj}} = -\alpha_j\, e_f\, \Theta_{fj} \qquad (A.9.6)$$

$$\dot{b}_{mj}(t) = -\beta_j\, e_f \frac{\delta\, e_f}{\delta\, b_{mj}} = \beta_j\, e_f\, u_{fj} \qquad (A.9.7)$$

The resulting scheme as shown in the figure is called the G.E.E. design. This scheme has been verified by Lion [43] to be globally asymptotically

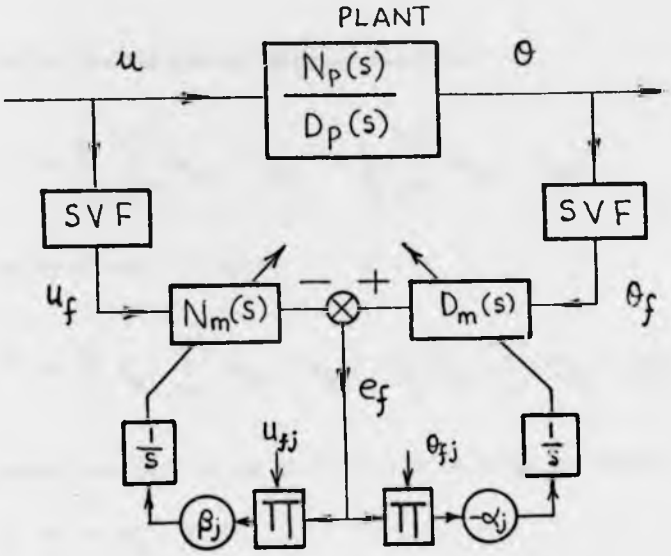

Fig. A.9.1

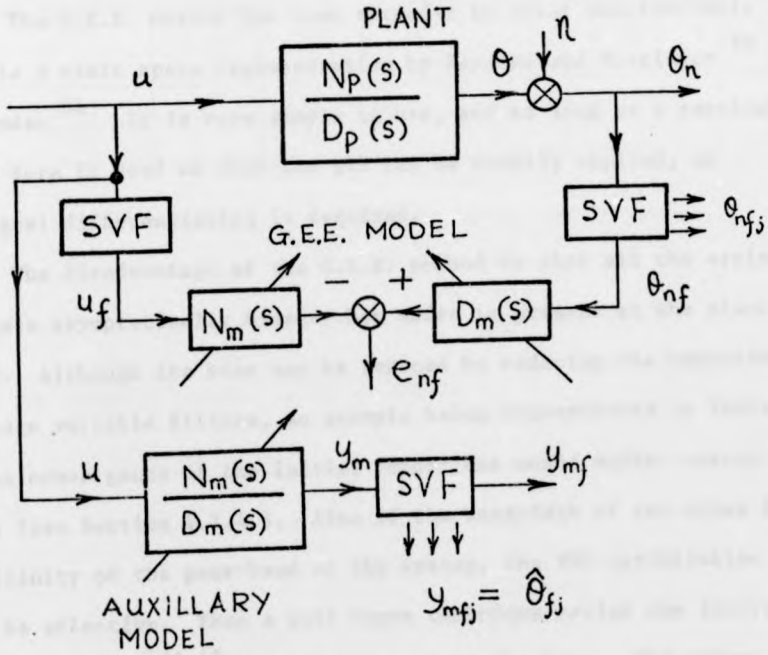

Fig. A.9.2

stable by using the following Liapunov function:

$$V = \frac{1}{\alpha_j} \sum_{j=0}^{n-1} (a_{mj} - a_{pj})^2 + \frac{1}{\beta_j} \sum_{j=0}^{n-1} (b_{mj} - b_{pj})^2 \qquad (A.9.8)$$

The time derivative of V is

$$\dot{V} = \frac{2}{\alpha_j} \dot{a}_{mj} \sum_{j=0}^{n-1} (a_{mj} - a_{pj}) + \frac{2}{\beta_j} \dot{b}_{mj} \sum_{j=0}^{n-1} (b_{mj} - b_{pj}) \qquad (A.9.9)$$

Combining equations (A.9.5) to (A.9.7) with (A.9.9), we obtain

$$\dot{V} = -2\, e_f^2 \leq 0 \qquad (A.9.10)$$

Thus together with the identifiability conditions stated in appendix A.7, global stability is established in the sense that $e_f \to 0$, $a_{mj} \to a_{pj}$ and $b_{mj} \to a_{pj}$ asymptotically.

The G.E.E. method has been extended to treat multivariable systems via a state space representation by Pazdera and Pottinger [49] and by Landau [64]. It is very simple to use, and as long as a particular canonical form is used so that the SVF can be readily applied, no direct signal differentiation is required.

The disadvantage of the G.E.E. method is that all the estimates of a_{mj} are asymptotically biased when noise is present at the plant output Θ. Although the bias may be reduced by reducing the bandwidth of the state variable filters, an example being demonstrated in Table A.9.1, the convergence of the initial conditions would suffer correspondingly (see Section 4.2.4.). Also if the bandwidth of the noise is in the vicinity of the pass-band of the system, the SVF optimization will not be effective. Then a well known technique called the Instrumental Variable (IV) method [41,45] is needed to remove the bias. The scheme is shown in Fig. A.9.2. The signal $\hat{\Theta}_f$ approximates the noise free Θ_f

and hence the following adjustment law can be used:

$$\dot{a}_{mj} = -\alpha_j \, e_{nf} \, \hat{\theta}_{fj} \qquad (A.9.11)$$

The expense of using the IV method, besides the obvious addition of hardware involved in generating the instrumental variables, is the loss of global stability assurance.

Noise/ Signal / ω_f	0.2		0.4		0.8	
	a_1	a_0	a_1	a_0	a_1	a_0
4	1.9	1.08	1.65	1.26	1.15	2.08
2	1.95	1.03	1.88	1.11	1.60	1.20
1	1.98	1.02	1.95	1.04	1.85	1.08
True value =	2	1	2	1	2	1

Table A.9.1. Steady states estimates.

Plant T.F. = $1/(s^2 + a_1 s + a_0)$; SVF = $\omega_f^2/(s + \omega_f)^2$

input = Sin(t); output noise is white.

A.10. Transformation to a Canonical Form

The canonical form (equation 4.10) used in Section 4.2 is

$$\begin{cases} \dot{\underset{\sim}{y}} = \begin{bmatrix} 0 & 1 & 0 & \cdots & 0 \\ 0 & 0 & 1 & \cdots & \cdot \\ \vdots & & & & \vdots \\ 0 & & & & 1 \\ -a_0 & -a_1 & \cdots & & -a_{n-1} \end{bmatrix} \underset{\sim}{y} + \begin{bmatrix} 0 & \cdots & 0 \\ \cdot & & \cdot \\ \cdot & & \cdot \\ \cdot & & \cdot \\ b_0 & b_1 \cdots & b_{n-1} \end{bmatrix} \underset{\sim}{u} \\ \theta = y_1 \end{cases} \qquad \text{(a.10.1)}$$

$\underset{\sim}{u} = [u\ \dot{u} \ldots \overset{(n-1)}{u}]^T$. This form may not be easily converted into other well known canonical forms using "similarity transformations" [73]. In this appendix, we shall show how to compute a standard canonical form (the output or observable form) from the combination of $\underset{\sim}{x}$, $\underset{\sim}{u}$, $\underset{\sim}{a}$ and $\underset{\sim}{b}$. From the output form, then, other canonical forms can be directly obtained using a similarity transformation. The output form is:

$$\begin{cases} \dot{\underset{\sim}{x}} = \begin{bmatrix} -a_{n-1} & 1 & 0 & \cdots & 0 \\ -a_{n-2} & 0 & 1 & \cdots & 0 \\ \vdots & & & \ddots & \vdots \\ -a_1 & 0 & & & 1 \\ -a_0 & 0 & & \cdots & 0 \end{bmatrix} \underset{\sim}{x} + \begin{bmatrix} b_{n-1} \\ b_{n-2} \\ \vdots \\ \\ b_0 \end{bmatrix} u \\ \theta = x_1 \end{cases} \qquad \text{(a.10.2)}$$

From (a.10.1), we have

$$\dot{y}_1 = y_2 = \dot{\theta}$$

$$\dot{y}_2 = y_3 = \ddot{\theta}$$

$$\vdots$$

$$\dot{y}_{n-1} = y_n = \overset{(n-1)}{\theta}$$

Hence, knowing Θ and its $(n-1)$ derivatives, the $\underset{\sim}{y}$ can be generated. What we look for is then $\underset{\sim}{x}$ expressed as a function of $\underset{\sim}{y}$.

Now from (a.10.2),

$$\dot{x}_1 = -a_{n-1}\, x_1 + x_2 + b_{n-1}\, u$$

$$\therefore\ x_2 = \dot{x}_1 + a_{n-1}\, x_1 - b_{n-1}\, u$$

$$\dot{x}_2 = -a_{n-2}\, x_1 + x_3 + b_{n-2}\, u$$

$$\therefore\ x_3 = \ddot{x}_1 + a_{n-1}\, \dot{x}_1 + a_{n-2}\, x_1 - b_{n-1}\, \dot{u} - b_{n-2}\, u$$

Similarly $x_4, \cdots x_n$ can be obtained. Using the equality that $x_1^{(i)} = \Theta^{(i)} = y_{i+1}$ the above can be written in the following way:

$$\underset{\sim}{x} = \begin{bmatrix} 1 & 0 & 0 & \cdots & 0 \\ a_{n-1} & 1 & 0 & \cdots & 0 \\ a_{n-2} & a_{n-1} & 1 & & \\ \vdots & & & \ddots & \vdots \\ a_1 & a_2 & \cdots & a_{n-1} & 1 \end{bmatrix} \underset{\sim}{y} - \begin{bmatrix} 0 & 0 & 0 & \cdots & 0 \\ b_{n-1} & 0 & 0 & \cdots & 0 \\ b_{n-2} & b_{n-1} & 0 & & \vdots \\ \vdots & & & \ddots & 0 \\ b_1 & b_2 & & \cdots & b_{n-1} \end{bmatrix} \begin{bmatrix} u \\ \dot{u} \\ \ddot{u} \\ \vdots \\ u^{(n-2)} \end{bmatrix}$$

(a.10.3)

The calculation involves only algebraic operation and is most conveniently done on a digital computer. Note also that equation (a.10.3) holds only when $\dot{a}_i$ and $\dot{b}_i$ are zero, i.e. when the parameter adjustments have ceased. This means that the transformation into $\underset{\sim}{x}$ estimates are only valid when a_i and b_i have been correctly estimated.