THE UNIVERSITY OF WARWICK

Original citation:
Cristea, Alexandra I. and Kinshuk, K. (2003) Considerations on LAOS, LAG and their integration in MOT. In: World Conference on Educational Multimedia, Hypermedia and Telecommunications (ED-MEDIA 2003), Hawaii, US pp. 511-518.

Permanent WRAP url:
http://wrap.warwick.ac.uk/61250

Copyright and reuse:
The Warwick Research Archive Portal (WRAP) makes this work by researchers of the University of Warwick available open access under the following conditions. Copyright © and all moral rights to the version of the paper presented here belong to the individual author(s) and/or other copyright owners. To the extent reasonable and practicable the material made available in WRAP has been checked for eligibility before being made available.

Copies of full items can be used for personal research or study, educational, or not-for-profit purposes without prior permission or charge. Provided that the authors, title and full bibliographic details are credited, a hyperlink and/or URL is given for the original metadata page and the content is not changed in any way.

A note on versions:
The version presented in WRAP is the published version or, version of record, and may be cited as it appears here.For more information, please contact the WRAP Team at: publications@warwick.ac.uk

warwickpublicationswrap
highlight your research

http://wrap.warwick.ac.uk/

Considerations on LAOS, LAG and their Integration in MOT

Alexandra Cristea[1] and Kinshuk[2]
[1]Information Systems Department, Faculty of Mathematics and Computer Science
Eindhoven University of Technology, The Netherlands
a.i.cristea@tue.nl
[2] Information Systems Department, Massey University, Palmerston North, New Zealand
kinshuk@inspire.net.nz

Abstract: We have previously developed *LAOS*, a 5-layer adaptive authoring model for adaptive hypermedia, and *LAG*, a 3-layer adaptation model. Our primary goal is to integrate these two models and to reflect this integration as an extension of *MOT*, an on-line tool for adaptive hypermedia design. This paper focuses on the integration of LAG and LAOS, and the implications this integration has on the UM and AM layers in LAOS. Moreover, we show the specific functionality that can be implemented in MOT. MOT will be used as a test-bed for the European Community project "ADAPT: Adaptivity and adaptability in ODL based on ICT" under the umbrella of the Socrates – Minerva programme. Therefore it will need to demonstrate design capabilities of different levels of adaptability and adaptivity, with special application in the distance learning domain.

1. Introduction

Adaptive hypermedia is a relatively new but exciting field, opening many possibilities, especially in the educational domain (Brusilovsky 2001), but also for commercial applications. Our research on adaptive hypermedia has two main axes: one is finding a more appropriate and defining a more general *data storage and manipulation model for adaptive response*, partially by extending AHAM, an existing adaptive hypermedia reference model (Wu 2002). Our modeling efforts generated LAOS, a five-layer authoring model for adaptive hypermedia (Cristea, De Mooij 2003) and LAG, a three-layer adaptation model (Cristea, Calvi 2003), both of them shortly depicted in the following section; the other direction is to *implement an authoring tool for adaptive hypermedia*, which is to instantiate the created models. The latter purpose is based on the fact that we have found in previous research (Cristea, Aroyo 2002) that the main problem of adaptive hypermedia being not more widely implemented lies in the difficulty of authoring such environments. We are trying to solve these problems by finding methods and techniques for the transforming of the authoring process in an easier task, mainly by automatizing many of the authoring tasks that are repeating, as well as extending this automatizing towards a new version of adaptation: designer adaptation (Cristea, De Mooij 2003c). This second purpose generated MOT, a designer adaptive authoring environment for WWW adaptive hypermedia authoring.

Returning to the educational domain, which is one of the major application fields of adaptive hypermedia, the difficulty of authoring an adaptive learning environment is clearly expressed by (Gilbert, Han 1999), who describe the ideal learning environment as consisting of many (or more exactly "infinite") teachers, each having their unique teaching styles, and in which the students are free to choose the teacher that perfectly matches their own learning styles. Indeed, customization implies alternative content and presentation means, as well as the adaptation techniques suited for different learning styles. Alternative content and presentation means determine constrains on the granularity and the labeling of the information presented, as elaborated by the LAOS model. Adaptation techniques for different learning styles, on the other hand, imply the necessity of different granularity levels for adaptation, as expressed by the LAG model (also extended in section 4).

The remainder of this paper is structured as follows: section 2 briefly describes LAOS and LAG, and our aim at joining the two models, both theoretically, but also physically, in MOT. Section 3 is dedicated to the connection of teaching strategies from educational psychology research and the LAOS (and LAG) models, identifying common points and discussing diverging ones. Section 4 extends LAOS, with special focus on the functionality of the AM and UM layers of the model. Section 5 shortly discusses the further integration of LAOS and LAG in MOT and in section 6 we draw some conclusions.

2. LAOS and LAG

Previously (Cristea, De Mooij 2003), we gave a more generalized model for generic adaptive hypermedia authoring, in the form of a layered model for adaptive hypermedia authoring design methodology for the Web, LAOS. LAOS is based on a previous model for adaptive Web courseware design authoring (Cristea, Aroyo 2002). The LAOS model is composed of the following five layers (see Figure 1a): *conceptual layer* expressing the *domain model* (DM) (with sub-layers: atomic concepts and composite concepts – with their respective attributes), *goal and constrains model* (goals, to give a focused presentation, and constrains, to limit the space of the search), *user model*, *adaptation model* and *presentation model*. All these layers are powered by the adaptation engine (AE). In (Cristea, De Mooij 2003) we have mainly concentrated on the functionality of the DM and GM layers. The functionality of the AM was converted into a three layer model, LAG (see Figure 1b), as first mentioned in (Cristea, De Bra 2002), and partially defined in (Cristea, Calvi 2003): *direct adaptation techniques* (such as condition-action (CA) rules), *adaptation language* (which will be further on sketched in section 4) and finally, *adaptation strategies* (as discussed in the next section).

In this paper we are making the link between the two models LAOS and LAG, as shown in Figure 1, in the connection between a) and b). Moreover, we elaborate on and extend the less treated layers of LAOS: UM and AM. Especially for adaptation strategies, in the context of Open Distance Learning (ODL) based on the Information and Communication Technology (ICT), educationally oriented adaptation strategies can be developed. In the following, we will show an extraction of the educational aspects of adaptation.

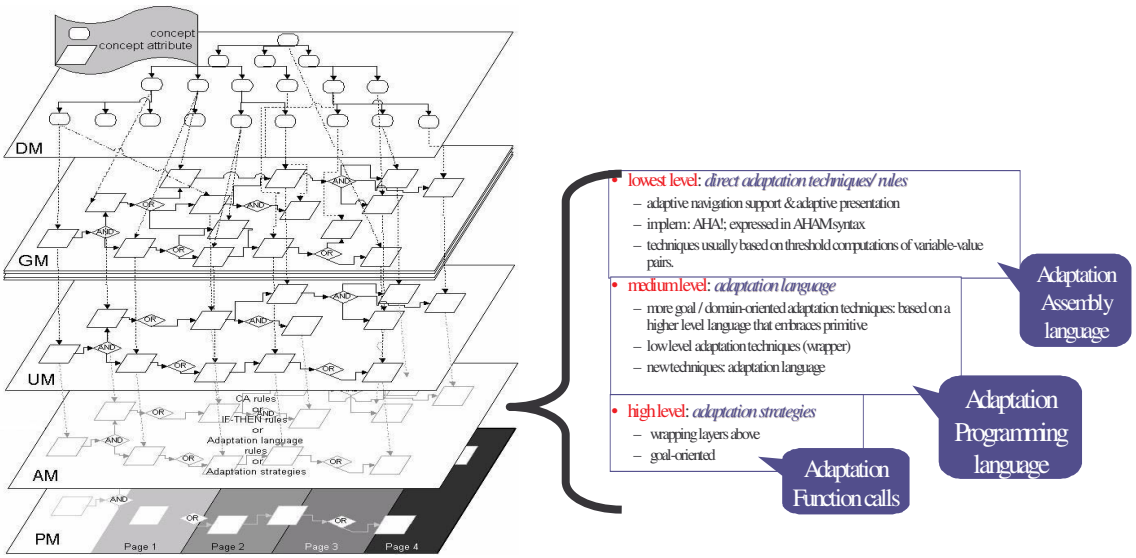

Figure 1: a) The five level AHS authoring model; b) The three layers of adaptation

3. Educational Aspects of Adaptation and their Integration in LAOS

Kinshuk (2002) advocates that *know-how*, as a constituent of *domain compete*nce, is "most suitable for computer-based learning". The way of learning know-how is supposed to be "easier .. from making mistakes". The other constituents of domain competence, defined as the sum of *domain knowledge* and *skills* (cognitive and physical) are listed as being: *know-how*, *know-why*, *know-when*, *know-what* and *know-about*, together with their complements *know-how-not*, *know-why-not*, *know-when-not*, *know-what-not*.

The adaptation with educational purposes is classified by (Kinshuk, Lin 2003) as being:

- Content based adaptation (multiple representation approach)
  - Multimedia object selection
  - Navigational object selection
  - Integration of multimedia objects
  - Exploration adaptation (with exploration space control - ESC)

- Adaptation to learner model factors

Content-based adaptation with educational purposes can be further on decomposed according to the domain competence of the user (here, learner), which can determine the task specificity, as follows in Table 1.

Table 1: Multimedia object selection: Task specificity and learner's competence.

Domain competence level	*Task*	*Examples of multimedia objects*
Novice in both in knowledge and skills	Direct instruction for knowledge	Text, pictures, audio, animations
Intermediate in knowledge, novice in skills	Direct instruction for skills with little exploration possibilities	Animations, videos, textual links, sensitive parts in static pictures
Intermediate in both knowledge and skills (Ready for problem solving)	Learning by problem solving for both skills and knowledge	Pictorial VR (e.g. asking correct position of a part in structure), Flowchart (e.g. asking a decision point)
Expert in knowledge, intermediate in skills	Advance exploration possibilities	Flowcharts, user controlled animations, simulations
Intermediate in knowledge, expert in skills	Advance active observations	User controlled animations, advance Pictorial VR
Expert in both knowledge and skills	Practice required for achieving mastery	Advance user controlled animations, advance simulations

This decomposition generates for each domain competence level a corresponding adaptation strategy, that very well suits the LAOS-LAG model. The third column enforces specific attributes for concepts[1], such as text, pictures, audio, etc. The pairs of the first and second column represent the knowledge processing style of the user, paired with the respective adaptive (teaching) strategy. These adaptive strategies can be further decomposed, according to the LAG model, into adaptive programming language constructs, and further on, into condition-action (CA) rules (see (Cristea, Calvi 2003) and section 4.1 for more details).

The *navigational object selection* within content-based adaptation should provide *adaptability* (interaction objects: provide transition from one part of the system to another on learner's initiative) and *adaptation* (interactive objects: facilitate a contextual transfer recommended by the system). The navigational object selection, as well as the following sub-classification, the *integration of multimedia objects*[2], are more concerned with issues corresponding to the PM in LAOS, which is beside the current scope of this paper, so we will therefore not go into any details about it here.

A more interesting issue for our model is the *exploration adaptation*, especially in the sense of exploration space control, as shown in Figure 2.

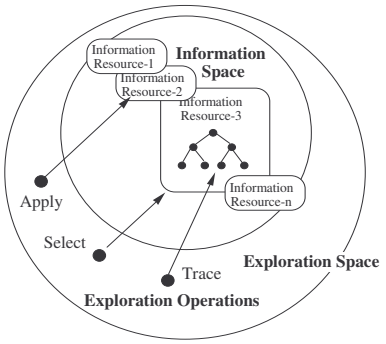

Figure 2: Exploration Space

Table 2: Exploration operators for ESC

Control Levels	Exploration Operations
Information resources	Select, Integrate
Exploration paths	Select, Trace, Apply
Presented information	Interpret, Understand

ESC can be used to limit the access of the user (here, learner) to the existing data space, according to some considerations about, for example, the domain complexity and the learner's competence, understanding levels, experiences, characteristics. In other words, ESC is an adaptation tool that influences in our LAOS

[1] In our model, concept attributes represent alternative views/ descriptions of those concepts, so are the multiple representations that are advocated as being needed.

[2] advocating correspondence of *text-text*, *text-pictures*, *audio-animations*, etc., presentations and advising against, e.g., *simulations-static pictures* combinations

model the UM, based on the DM, GM and, of course, the AM and previous state of the UM (see next section for more details). (Kinshuk 2002) defines the ranges of ESC as being between *active learning* (with almost no cognitive load reduction) and *step-by-step learning* (with almost full cognitive load reduction). ESC control levels are as follows:

- Embedding information – creating information space
- Limiting information sources
- Limiting exploration paths
- Limiting information to be presented (information 'mouthful' size)

ESC has influence on more than one layer in our LAOS model, as each lower level layer is mainly a space control tool and wrapper for the upper layer. In this sense, the GM is a space controlled version of the DM and the UM is a space controlled version of the GM (and DM). The scaffolding methods proposed, with granulation control and information labeling can find their correspondent in the LAOS model, especially with regard to the DM and the concept-attribute structure.

It is also interesting to note the operators used for space access in Figure 2 and Table 2 and to make the mapping to the operators we have previously defined for management and access of the DM and GM in (Cristea, De Mooij 2003); moreover, it is useful to make also the connection with the operators that will be necessary for managing and accessing the UM, but these are issues beside the scope of the current paper.

4. Extension of LAG and the UM according to the educational implications

In our definition of the LAOS five-layer model (Cristea, Mooij 2003) we have refined especially the components and operators of the DM and GM, without going into many details about the AM and UM. Here we will try to give more details about these layers, their components and their functionality.

4.1. Extensions of the AM

One reason of previously not giving too many details on the AM is that the AM that we want to use follows very closely the AHAM (Wu 2002) AM, at least at the lower level of adaptation (adaptation assembly language, as defined in Cristea, De Bra 2002). The adaptive behavior is given by CA rules (Wu 2002), with events transcribed into conditions that become fulfilled. The lower adaptation level has been shown to be expressible with a relational algebra[3] syntax or with an equivalent SQL-like language (Wu 2002). The relational algebra is useful as being a family of algebra with a well-founded semantics, used for modeling data stored in relational databases, and defining queries on it. The main operations of the relational algebra are the *set* operations (such as *union*, *intersection*, and *Cartesian product*), *selection* (keeping only some lines of a table) and the *projection* (keeping only some columns). A complete data-manipulation language includes not only a query language, but also a language for database modification (*insert*, *delete* tuples, *modify* tuples) (Silberschatz 2002). As the DM and GM are data models, they can be stored in relational databases, and therefore accessed via queries[4]. The same goes for the AM.

The fundamental operations of the relational algebra or their equivalent SQL-like notation are sufficient to express any relational-algebra-like query. In particular, for the AM, the SQL-like language introduced in (Wu 2002) covers any type of IF-THEN-like (or CA) occurrence that should be triggered by the AE. However, if we restrict ourselves to just fundamental operations, certain common queries are lengthy to express. Especially for the domain of education, where most of the adaptive hypermedia research finds its application, there are certain constructs (*patterns*) that appear repetitively and should be identified as such. Moreover, by grouping these constructs it is possible to attach *semantics* to them. Therefore, we have introduced in (Cristea, De Bra 2002) and extended in (Cristea, Calvi 2003) some medium-level adaptation

[3] A loose term for an algebraic structure, i.e., any formal mathematical system consisting of a set of objects and operations on those objects.

[4] We have made the parallel in our previous work between the different operators in the DM and GM layers of the LAOS model and an RDF relational algebra (Cristea, Mooij 2002).

language operators, as well as indicated some possibilities of constructing higher-level adaptation strategies on top of these adaptation language operators (as also shown in the previous section).

These adaptation rules can trigger in principle operations on all levels (Cristea, Calvi 2002), so use the 'Create', 'Delete', 'List', 'View', 'Check' and 'Repeat' operations we have defined for the DM and GM, respectively. However, we have opted here for a non-intrusive model, which can access the DM and GM without modifying them[5]. This means that only the operations 'List', 'View', 'Check' and 'Repeat' can be used to access DM and GM via the AM. The adaptation language constructs are applied on the DM and GM and result in modifications, instantiations and extensions of the UM[6]. This also means that everything concerning the user is grouped within his/her own user model, including items of the DM or GM s/he has to visit next[7], etc. We are going to discuss these issues more in section 4.2.

The commands we defined in (Cristea, Calvi 2003) are generic, so they can work on any concept map that has also at least one hierarchical relation[8]. However, especially for the GM, but also for our specific definition of the DM, these operations can be extended. For instance, the GM has the special propriety that its elements are ordered, so a possible operator 'NEXT' can be defined on the concept structure, as follows:

(1) NEXT(g_k)= g_{k+1} ; with g_k are concepts sharing the same father concept in GM.

Moreover, the different link types can induce (semi-)automatically different programming level adaptation rules in the AM.

Other operators, which we defined elsewhere (see Chen et al. 2003) in a slightly different context (different domain level composition), can be also integrated into the adaptation language level:

(2) The FOCUS operator on the concept tree (here, DM, domain module) determines the new conceptual sub-graph (to be used in learning), which is obtained from the initial sub-graph by removing those dialogues, which are not subtopics/concepts of the current concept (or current selected concept set) with respect to the concept tree. This operator is equivalent to the SPECIALIZE command applied on the concept tree[9].

(3) The FOCUS operator on the lesson tree (here, GM, goal module) determines the new learning sub-graph, which is obtained from the initial sub-graph by removing those dialogues, which are not subtopics/concepts of the current concept (or current selected concept set) with respect to the lesson tree. This operator is equivalent to the SPECIALIZE command applied on the concept tree[10].

(4) The STUDY operator on the concept tree (here, DM, domain module) works as follows: if the learning graph in the current UM contains all (relevant) prerequisites of a (set of) concept(s) in a CM instance GM_i, then the (set of) concept(s) can become (part of) the personal curriculum to study. I.e., the study operator can turn a (set of) concept level concept(s)' visibility or accessibility Boole value to true, according to the AE settings[11]. Note that at the CM level there is no prerequisite relation, so therefore the prerequisite set of a concept in CM is the sum of all prerequisites of all concept attributes pointed to from the GM level, as defined in a GM instance GM_i:

$$prerequisite\ (c,j)=\cup_k\ (prerequisite(g_k)\wedge\ relevant(g_k));\ c\in CM\ g_k\in GM_i$$

---

[5] This makes sense, as there is no reason why the adaptation to one person should change the public domain. We do not treat at the moment group behavior adaptation, where the reflection of the group behavior into changes of the public domain can be beneficial.

[6] In the sense of true separation of the LAOS layers (DM, GM, UM, AM, PM), the AM cannot influence anything else but the UM (and finally the PM, but this is outside the scope of the current paper). Please note that this is a more strict delimitation than that accepted by AHAM (Wu 2002), where such crossovers are still permitted.

[7] Of course, there doesn't have to be an actual copy of the information, pointers being enough.

[8] but can have other relations as well, of different types, such as the relatedness relations described in (Cristea, De Mooij 2003b).

[9] Please note that the SPECIALIZE command is more generic, and has not been defined on a specific domain, therefore being able to be transferred in various domains with hierarchical representation.

[10] Same comment as above.

[11] The STUDY operator actually can be part of the AE, as it is the AE's job to check and interpret the adaptation rules.

(5) The STUDY operator on the lesson tree (here, GM, goal module) works as follows: if the learning graph in the current UM contains all prerequisites of a (set of) concept(s) as defined in a GM instance GM_i, then the (set of) concept(s) can become (part of) the personal curriculum to study. I.e., the study operator can turn a (set of) goal level concept(s)' visibility or accessibility Boole value to true, according to the AE settings.

(6) The SKIP operator on the concept tree (here, DM, domain module) removes the current (set of) domain concept(s) and all its sub-concepts. This operator allows a user (designer, teacher) or the system to remove some parts of the curriculum[12].

(7) The SKIP operator on the lesson tree (here, GM, goal module) removes the current (set of) goal concept(s) and all its sub-concepts. This operator allows a user (designer, teacher) or the system to remove some parts of the curriculum.

4.2. Extensions of the UM

There are many ways of constructing the UM. We envision the UM as given by a set of three components:

1. a *concept map of user variables* and their respective values (UVM)
2. a *history concept map* (HM): an overlay model of visited attributes and concepts from the GM and DM (a copy or a pointer to them) with extra historical variables and their respective values attached (e.g., a set of *[date of visit, duration]* for each visit)
3. a *future concept map* (FM): an overlay model of attributes and concepts from the GM and DM to be visited (copy or pointers to them); this map should be in the general case dynamic, i.e., its components (concepts, attributes, links, variables, values) can vary according to the AM application by the AE and the user's decisions.

The proposed UM layers are depicted in Figure 3. Please note that UVM allows both hierarchical as well as cross-hierarchy relations between the user model concepts. Also note that in the simplest case the UM can be reduced to an overlay model of the GM and DM[13]. This happens if:

- the 'history map' has only the Boolean variable 'visited?' attached to its concepts,
- the 'future map' is relatively static (only allows to change values of variables, and not the variables, links or concepts themselves) and
- the concept map of other user variables than the ones given by 2.,3. is $\emptyset$.

Just like in AHAM, the AM model has the role to specify how to make the transition:

$UM_t \rightarrow UM_{t+1}$[14]; with $t \in N$, $t \geq 0$ discrete moments in time.

5. Integration of LAOS and LAG in MOT

One of the main ideas in MOT is to keep things apart – to have a clear distinction between the different levels of specification, as recommended by the LAOS model (Cristea, Mooij 2003) and partially by AHAM (Wu 2002), in order to be able:

1. to efficiently re-use them (model parts, such as concepts, links, attributes, values, etc.)
2. to apply adaptive hypermedia adaptation rules (adaptation and adaptability).

This is the reason why the whole implementation in MOT is done based on the LAOS model, and the data storage is done via a MySQL database, whose table separation scheme (ER scheme) instantiates the logical separation of the different levels in the LAOS model. The reason of choosing a MySQL database representation as opposed to the so popular XML data representation lies in the fact that we consider multiple relations

---

[12] The SKIP operator can be used to skip the children of a specific concept (be it a domain or goal level), to keep the generalization degree of the narrative constant. Therefore, SKIP comes to complete the family of operators to which SPECIALIZE and GENERALIZE belong (Cristea, Calvi 2003).

[13] In this way, the AHA! environment can be simulated as an instance (reduction) of the LAOS-LAG model.

[14] In AHAM this transition is $UM_s \rightarrow UM_f$; with an event triggering the transition from s=start to f=finish state and a number of rules being applied in the process (internally).

between the concepts in our concept maps at the different levels, which are easier to represent in a database format (where multiple relations are part of the specification). In this paper we have just introduced the UM layer based on a similar structure of hierarchical, but also relational links between the UM variables. XML is good for representing hierarchical data, with very little cross-relations, i.e., the student view of the adaptive hypermedia presentation. Therefore, the final output for the AE will actually be in XML format, as this is the output that the AHA! adaptation engine we are planning to use is running with. This will be the language for the interface output from the adaptation rules in the LAG model to the MOT AM model, as shown in Figure 4. The interfaces for data creation are implemented in Perl (Cristea, De Mooij 2003).

The figure of the integration of the LAOS and LAG models within the MOT system can be seen in Figure 4. The implementation of the two models, LAOS and LAG, takes place separately, their information exchange interface being only at the adaptation rules level, as can be seen in the figure. These (external) access points will also be implemented via the MySQL database, with tables encoding the low-level adaptation rules.

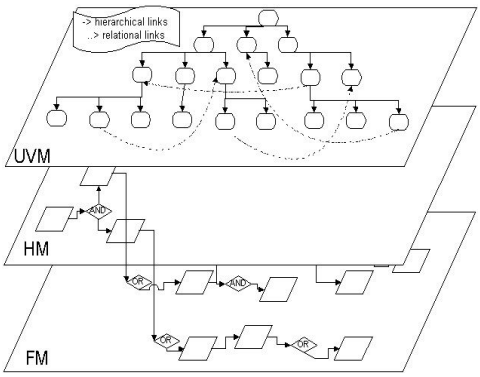

Figure 3: The 3-layered user model in LAOS

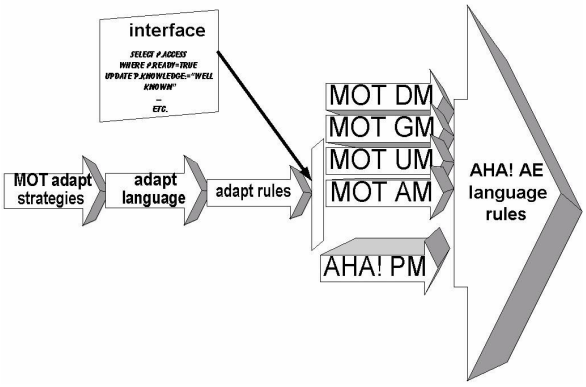

Figure 4: Integration of LAOS, LAG in MOT and

MOT currently supports the DM and GM layers in LAOS, while UM and AM, as well as the LAG model instantiation are currently under development. The implementation and testing of MOT done so far were described elsewhere (Cristea, De Mooij 2003b).

6. Conclusions

In this paper we have integrated two previously designed models, LAOS, a 5-layer adaptive authoring model for adaptive hypermedia and LAG, a 3-layer adaptation model. These models serve to keep the data representation of the adaptive (educational) hypermedia clear and easily-reusable, as well as to automatically perform adaptive annotation of the final hypermedia product, taking over many of the complex authoring tasks[15].

The specific focus in this paper is towards the implementation of educational adaptive strategies, as advocated by (Kinshuk 2002). These strategies correspond to the highest level in the LAG model, but the components they refer to can be found spread out in different places of the LAOS model. Therefore we consider the LAOS model to represent a better classification system for the different data necessary in an adaptive educational hypermedia system.

Moreover, we have given some extra extension directions – and some new adaptation operators for the adaptation language level of LAG - for two specific layers in the LAOS model which were not treated sufficiently before, the UM and AM.

The testing of these models, as well as their integration, is gradually implemented in the MOT system, an on-line adaptive hypermedia design and authoring system, with goal-oriented designer adaptation capabilities (see (Cristea, De Mooij 2003b) for more details). We have shown here the first steps towards integration of LAOS and LAG and how these reflect in MOT. An older running version of MOT can be found

[15] This already happens in LAOS (and is implemented in MOT), via automatic concept connection (Cristea, De Mooij 2003c) , i.e., automatic data structuring; however, a great part of the automatic adaptation generation is the task of the LAG model.

at: http://wwwis.win.tue.nl/~alex/MOT01/TeachersSite-html/index.html. The current version of MOT can be downloaded at: http://wwwis.win.tue.nl/~alex/MOT/.

7. Acknowledgements

This research is connected to the Minerva project "ADAPT: Adaptivity and adaptability in ODL based on ICT" (project reference number 101144-CP-1-2002-NL-MINERVA-MPP). This project has been carried out with the support of the European Community in the framework of the Socrates programme. The ADAPT project has its homepage at: http://wwwis.win.tue.nl/~alex/HTML/Minerva/index.html.

8. References

Brusilovsky, P. (2001). Adaptive hypermedia. *User Modeling and User Adapted Interaction*, Ten Year Anniversary Issue (Alfred Kobsa, ed.) 11 (1/2), 87-110.

Chen, J., Cristea, A., Okamoto, T. (2003). Communicative Task Modeling and Its Practice on Academic English Learning in a Web-based Environment. In *Proceedings of the International Conference on Telecommunications ICT'2003*, at the Telecommunications + Education Workshop (supported by the IEEE Learning Technology Task Force) February 23 - March 1, 2003 Tahiti, Papeete – French Polynesia (to appear).

Cristea, A.I., Aroyo, L. (2002). Adaptive Authoring of Adaptive Educational Hypermedia, In *Proceedings of AH 2002* (pp. 122-132). Adaptive Hypermedia and Adaptive Web-Based Systems, LNCS 2347, Springer.

Cristea, A.I., Calvi, L. (2003). The three Layers of Adaptation Granularity. *UM'03*. Pittsburg, US (under submission).

Cristea, A.I., De Bra, P. (2002). Towards Adaptable and Adaptive ODL Environments. In *Proceedings of AACE E-Learn'02* (pp. 232-239). Montreal, Canada, October 2002.

Cristea, A.I., Mooij, A. (2003). LAOS: Layered WWW AHS Authoring Model and their corresponding Algebraic Operators. *WWW'03*. Budapest, Hungary (under submission).

Cristea, A.I., Mooij, A. (2003b). Adaptive Course Authoring: My Online Teacher. In Proceedings of ITC'03. Papeete, Tahiti, February-March 2003 (to appear).

Cristea, A.I., Mooij, A. (2003c). Designer Adaptation in Adaptive Hypermedia Authoring. ITCC'03, Track on Modern Web and Hypermedia Systems. The Orleans, Las Vegas, Nevada Las Vegas, US, April 28-30, 2003 (under submission).

Gilbert, J. E., Han, C. Y. (1999). Adapting instruction in search of 'a significant difference. *Journal of network and computer applications*, vol. 22.

Kinshuk (2002). Adaptivity in Web-based Education focused on Cognitive Skills Acquisition. Tutorial at *CATE 2002*, Cancun, Mexico.

Kinshuk & Lin T. (2003). User Exploration Based Adaptation in Adaptive Learning Systems. *International Journal of Information Systems on Education* (in press).

Silberschatz, A., Korth, H.F., Sudarshan, S. (2002). *Database System Concepts* (4th Edition, International Edition). Mc Graw Hill, ISBN 0-07-228363-7.

Wu, H. (2002). A Reference Architecture for Adaptive Hypermedia Applications. *Doctoral thesis, Eindhoven University of Technology*. The Netherlands, ISBN 90-386-0572-2.